EnOcean / RS 232, RS 485 Modbus RTU Gateway

ENOCEAN-GWY-MOD

868 MHz

User Manual V1.21

English

OBSAH

Obsah 2
Terms and Abbreviations 4
1 Introduction 5
1.1 Device description 5
1.2 Hardware Overview 6
1.3 Product conformity and certification 6
1.4 Technical data 7
1.5 Safety information and warnings 8
1.6 Gateway dimensions (in mm) 9
1.7 Package content 9
1.8 Firmware upgrade 9
2 Device installation 10
2.1 Installation instructions 10
2.2 Electrical installation 10
3 RS 485 communication settings 12
4 MODBUS RTU communication description 13
4.1 Register map 13
4.1.1 Register map – Rx data 14
4.1.2 Register map – Rx config 15
4.1.3 Register map – Telegram log 16
4.1.4 Register map – Service data 18
4.1.5 Register map – Rx raw data 20
4.1.6 Register map – Rx Pressac data 21
4.1.7 Register map – Tx data 22
4.1.8 Register map – Channel labels 24
4.1.9 Register map – Rx data 2 25
4.2 Supported functions 26
5 Software tool EnOcean Tools 26
6 Supported EEPs for receiving data 26
6.1 Supported RPS telegrams 27
6.2 Supported 1BS telegrams 28
6.3 Supported 4BS telegrams 28
6.4 Supported VLD telegrams 37
6.5 Supported MSC telegrams 42
7 Supported EEPs for transmitting data 42
7.1 Supported RPS telegrams 43

7.2 Supported 1BS telegrams 43
7.3 Supported 4BS telegrams 43
7.3.1 BIDIRECTIONAL TEACH-IN (4BS TEACH-IN – VARIATION 3) 47
7.4 Supported VLD telegrams 47
7.4.1 BIDIRECTIONAL TEACH-IN (UTE TEACH-IN) 51
7.4.2 Smart Ack teach-in 52
7.5 Supported MSC telegrams 53
Revision history 54

Terms and Abbreviations

Term/Abbr.	Explanation
1BS	EnOcean 1 Byte Communication
4BS	EnOcean 4 Byte Communication
Channel number (CH)	Identifier of EnOcean device within the gateway
EEP	EnOcean Equipment Pofiles
ERP	EnOcean Radio Protocol
EURID	EnOcean Unique Radio Identifier
Label	User-friendly name of EnOcean device
MSC	EnOcean Manufacturer Specific Communication
RORG	Radio ORG = organization, number for EnOcean radio telegram types
RPS	EnOcean Repeated Switch Communication
RX	Incoming
Teach-in	Pairing of EnOcean devices
Telegram	EnOcean message
TX	Outgoing
Value index	Identifier of a data unit within the channel
VLD	EnOcean Variable Length Data telegram

THANK YOU

Thank you for purchasing our product! We believe in your satisfaction with the product that aligns with the company philosophy of the highest care and precision. In case of interesting ideas and concepts, please contact firvena@firvena.cz

www.firvena.com

1 INTRODUCTION

1.1 Device description

The ENOCEAN-GWY-MOD is a bidirectional gateway that allows wirelessly listening and controlling EnOcean elements via RS232 or RS485 MODBUS RTU. The EnOcean technology is characterized by very low power consumption and reducing battery use by harvesting light, kinetic or thermal energy. Modbus communication protocol is simple to implement and is widely used in building automation systems. The gateway is designed for a wide spectrum of elements, for example temperature, humidity, motion, CO2 sensors, electric current sensors, door/window opening sensors, wall switches, blind controllers, light controllers, relay switches, dimmers, heating valve controllers...

Thanks to wireless technology, this solution finds its use in objects where the operation has already been started and where new cables cannot be laid, or if there is temporary rental space and the owner wants to take the device and elements with.

The gateway is able to receive/transmit all telegrams as raw data of supported RORG types RPS, 1BS, 4BS, VLD and MSC according to the EEP specification. Content of these telegrams is copied to registers. It is required for data in such format (raw data) knowledge of telegram composition and decoding of contained values, which burdens the superior system. To simplify the use, conversion of values is made for selected products – see chapters 6 and 7. Supported products are being expanded according to actual needs of our customers.

The gateway can serve up to 40 EnOcean elements and is standardized for frequency 868 MHz. Possible option is also frequency 902 MHz.

The first part of the manual describes the hardware. Chapter 4 describes the Modbus interface and explains how EnOcean devices are mapped to Modbus registers. Chapters 6 and 7 contain the list of supported devices.

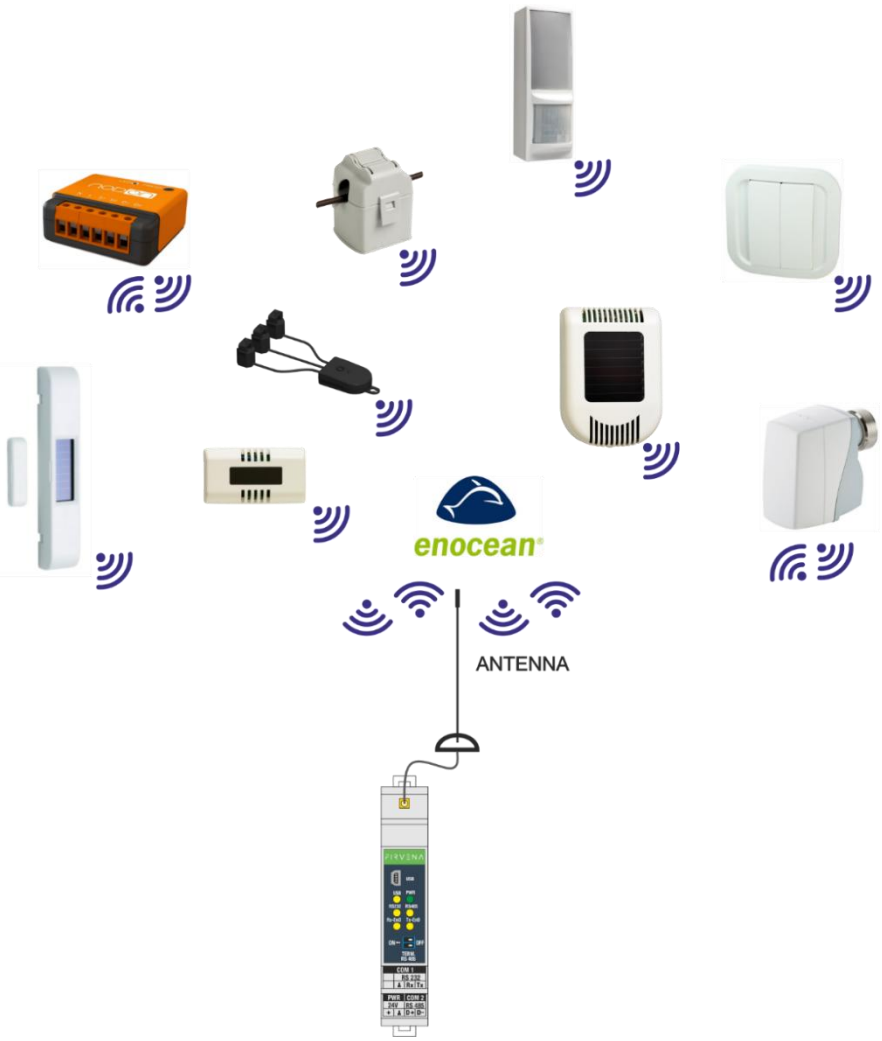

1.2 Hardware Overview

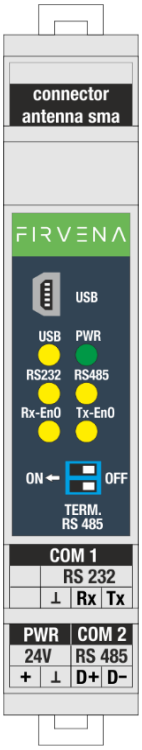

Front side of gateway for EnOcean / RS 232, RS 485 Modbus RTU has six LED diodes. Green LED diode marked with the symbol *PWR* is used for indication, if supply voltage is connected. For supply voltage connection, it lights green permanently. Yellow LED diodes indicate communication. Diode marked with USB indicates communication via USB interface. Diode marked with RS 232 indicates communication on the line RS 232. Diode marked with RS 485 indicate communication on the line RS 485 with the protocol MODBUS RTU. Diodes marked with Rx-EnO (receiving) and Tx-EnO (transmitting) are used for communication indication of EnOcean elements.

The gateway has two slide-out connectors. One is intended for DC supply and RS 485 communication and the other for RS 232 communication only. The gateway has also Mini USB connector.

The gateway contains SMA connector for antenna connection.

Double DIP switch is used to balance idle state of the line RS 485 MODBUS RTU. For more information see chapter 3.

1.3 Product conformity and certification

RoHS	**ROHS Directive** The device is manufactured in accordance with the directive 2015/863/EU (RoHS 3) of the European Parliament and of the Council on the restriction of the use of certain hazardous substances in electrical and electronic equipment.
CE	**EMC - Declaration of Conformity** The device is compliant with the directive 2014/53/EU. Approvals tests ČSN EN 55032, ČSN EN 6100-4-2, ČSN EN 6100-4-3, ČSN EN 6100-4-4, ČSN EN 6100-4-5, ČSN EN 6100-4-6, ČSN EN IEC 6100-6-2.
UK CA	**UK Conformity Assessed (UKCA)** The device is compliant with the British Legislation UK Conformity Assessed (UKCA) and meets all relevant requirements.
enocean	**EnOcean Technology** The device is fully compatible with the EnOcean radio protocol and as such is certified by the EnOcean Alliance Level 2.

1.4 Technical data

Category	Parameter	Value
Electrical data	rated voltage	24 V DC (recommended value for power supply)
	range possibility for power supply	10 – 25 V DC
	own consumption of device	80 mA
	power consumption	1.92 W
Communication RS 232	protocol	MODBUS RTU slave
	supported functions	3, 6, 16
	baudrate	optional from 1.2 kBd to 115.2 kBd
	number of bits	8
	stopbit	1, 2
	parity	no, even, odd
	delay between received and sent message	basic + optional 0…200ms
	adjustable addresses	1…247
	max. number of device on the line	1
	indication	yes, LED yellow colour RS 232
Communication RS 485	protocol	MODBUS RTU slave
	supported functions	3, 6, 16
	baudrate	optional from 1.2 kBd to 115.2 kBd
	number of bits	8
	stopbit	1, 2
	parity	no, even, odd
	delay between received and sent message	basic + optional 0…200ms
	adjustable addresses	1…32 247
	max. number of device on the line	32
	indication	yes LED yellow colour RS 485
Communication USB	protocol	MODBUS RTU slave
	supported functions	3, 6, 16
	baudrate	115.2 kBd
	number of bits	8
	stopbit	1
	parity	no
	adjustable addresses	1
	max. number of device on the line	1
	indication	yes LED yellow colour USB
EnOcean	frequency	868 MHz
	maximum number of EnOcean elements per 1 GWY	40 receiving channels 60 transmitting channels 20 Smart Ack devices
	supported formats of communication	RAW DATA: RPS, 1BS, 4BS, VLD, MSC Individual EEP support – see chapters 6, 7
Operating conditions	cover	IP 20
	operating temperature	-20 … +70 °C
	relative air humidity	max. 80 %
Dimensions in mm	without antenna, width x height x depth	17,5 x 56,4 x 102
Weight in g	without antenna	53

1.5 Safety information and warnings

Please follow the general safety regulations. This device may only be installed by a qualified person (accredited electrician) and after reading these instructions. Improper installation can result in health, property or equipment damage.

The product meets the general safety regulations. The protection Cover IP 20 allows installation only in normal, dry space.

The gateway must be powered from a safe voltage source that meets the requirements for input voltage range and must be installed in accordance with national and general safety standards.

Follow the safety instructions and applicable standards for the country and location of installation. The product may only be used in accordance with this manual.

To avoid the risk of electrical shock or fire, the maximum operating parameters of the gateway must not be exceeded.

Use only unmodified products.

Only cable types with sufficient cross-section and insulation properties may be used for the connection.

STORAGE

The device must be stored in a temperature range 0-40 °C and a relative humidity of up to 80 %, and non-condensing spaces. Products must not be exposed shock, harmful vapors or gases.

REPAIRS

Products are repaired by the manufacturer. Products to be repaired are shipped in a package that ensures shock absorption and protects the products against damage during shipment.

WARRANTY

The product is warranted 24 months from the date of delivery that is mentioned on the delivery note. The manufacturer only guarantees properties and parameters that are explicitly described in the technical documentation. Claims, complaints and returns must be directed exclusively to the manufacturer. The complaint must contain the exact product identification, delivery note number and defects description. The manufacturer is not responsible for defects caused by improper storage, improper external connection, damages caused by external influences especially due to unacceptable size, incorrect adjustment, improper installation, incorrect operation or normal wear and tear.

PRODUCT DISPOSAL

The product does not belong to municipal waste. The product must be disposed to the separate waste collection with the possibility of recycling, according to local regulations and legislation. The product contains electronic components.

1.6 Gateway dimensions (in mm)

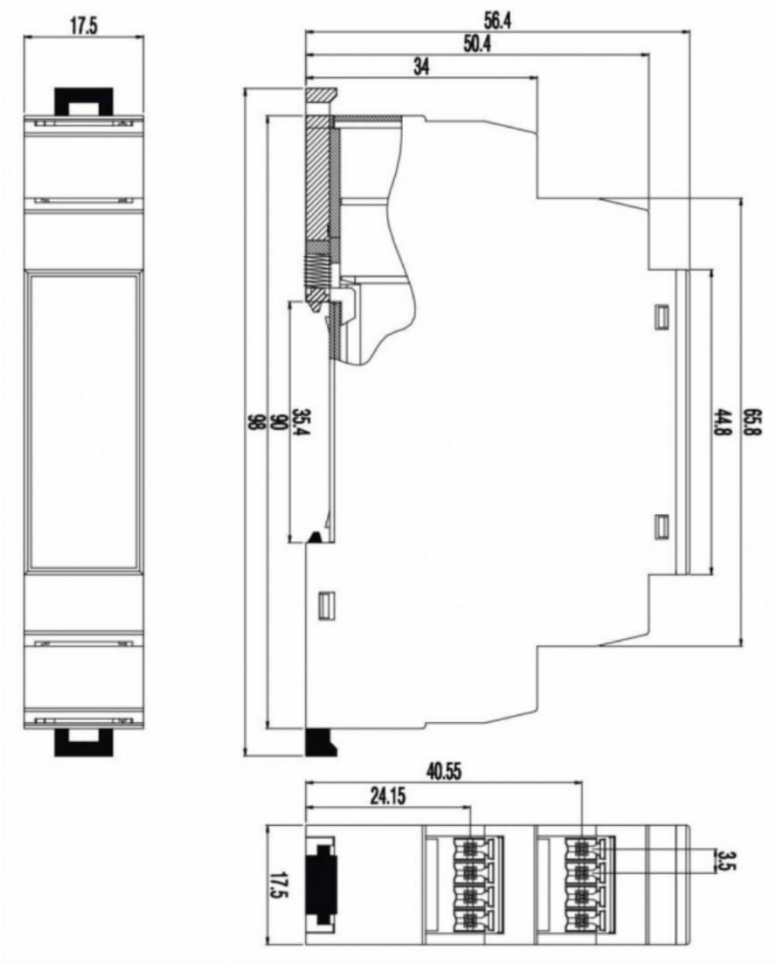

1.7 Package content

The package contents gateway ENOCEAN-GWY-MOD, external antenna with 2 m long cable and magnetic base, quick installation guide, USB mini cable (number of cables may be reduced with higher gateway supplies).

1.8 Firmware upgrade

Please, pay attention to the current firmware version. A new version of firmware is released from time to time due to continuous improvements of the product. Firmware can be upgraded via RS485, RS232 or Mini USB port using the EnOcean Tools application. See the application manual for details or press F1 for help in the application. Download the latest **firmware**, **application EnOcean Tools** and **application manual** at www.firvena.com -> SUPPORT/DOWNLOAD/ENOCEAN-GWY-MOD.

2 Device installation

2.1 Installation instructions

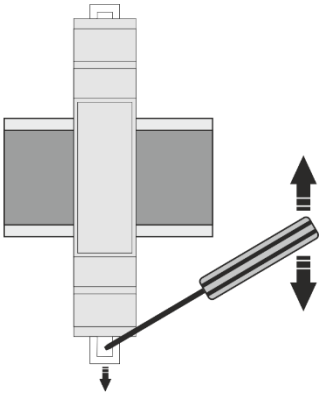

The gateway is most commonly installed into the control cabinet on a DIN rail. The gateway is fixed to the DIN rail by using plastic locks which are located on the top and bottom. See the picture. The gateway is delivered including external antenna with 2 m long cable and magnetic base which is installed outside the control cabinet.

2.2 Electrical installation

After device installation, wires are connected to terminals.

Example for connection of stabilized DC supply voltage:

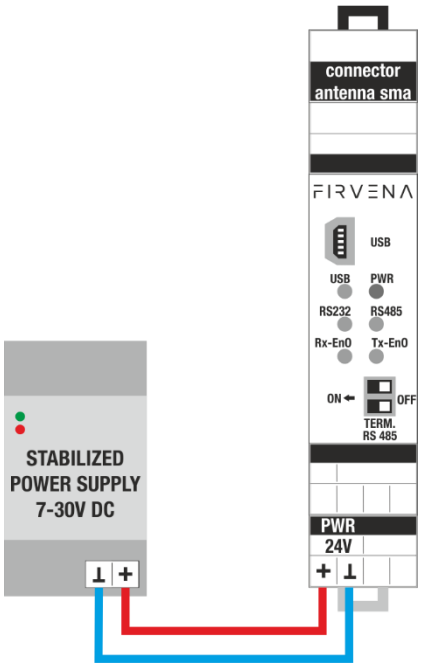

Example for connection of communication through serial line RS 232:

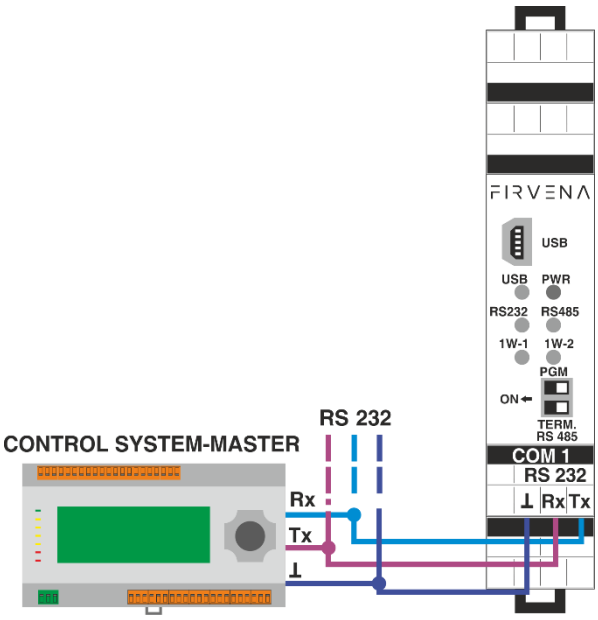

Example for connection of communication through serial line RS 485:

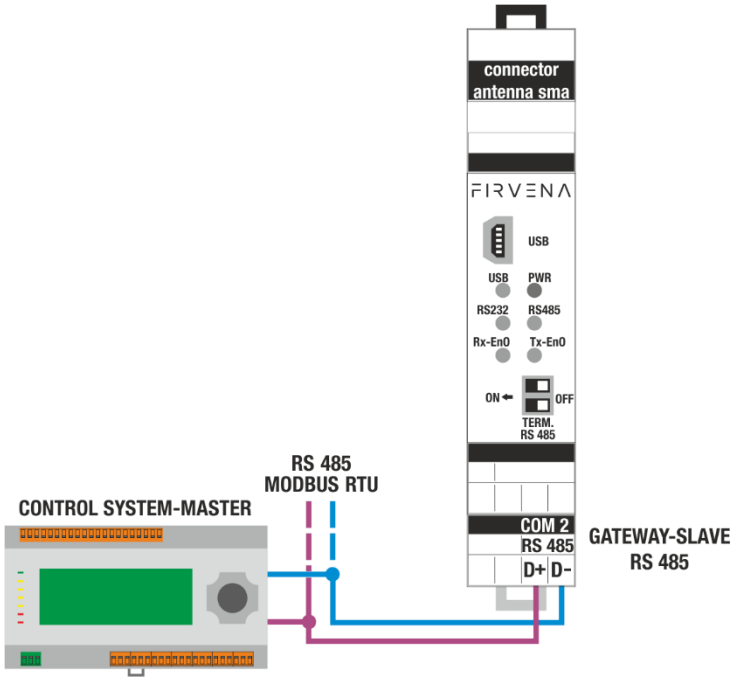

Note: If communication does not run on RS 232, RS 485, we recommend swapping the wires for RS 232 (Rx with Tx) or for RS 485 (D+ with D-) due to different specifications by control system manufacturers.

Example for connection of communication through USB interface:

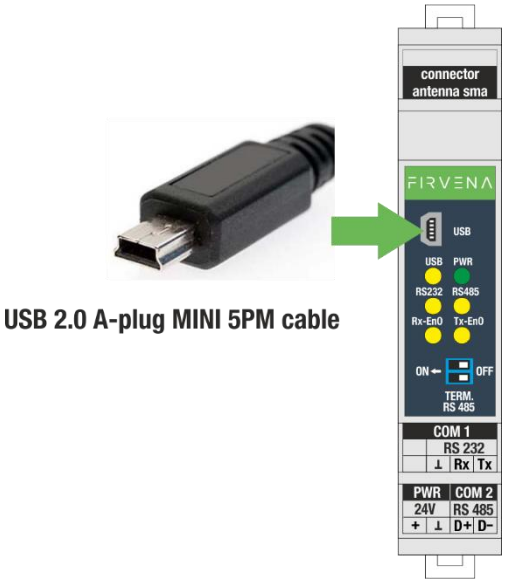

Note: For testing purposes and settings, the gateway can be powered via USB.

3 RS 485 COMMUNICATION SETTINGS

Balance of idle state of the line RS 485 MODBUS RTU:

Communication serial line RS 485 MODBUS RTU in idle state, when no device transmits and all devices are to receive, the line is especially sensitive to induced voltage (faults) that may appear as incoming erroneous data.

For this reason, it is important to balance the idle state of the line by connection of appropriate resistors or terminators to one location on the line. It is implemented terminator in the device that is connected to the circuit with double DIP switch. For long lines, we recommend to connect cable shield to GND.

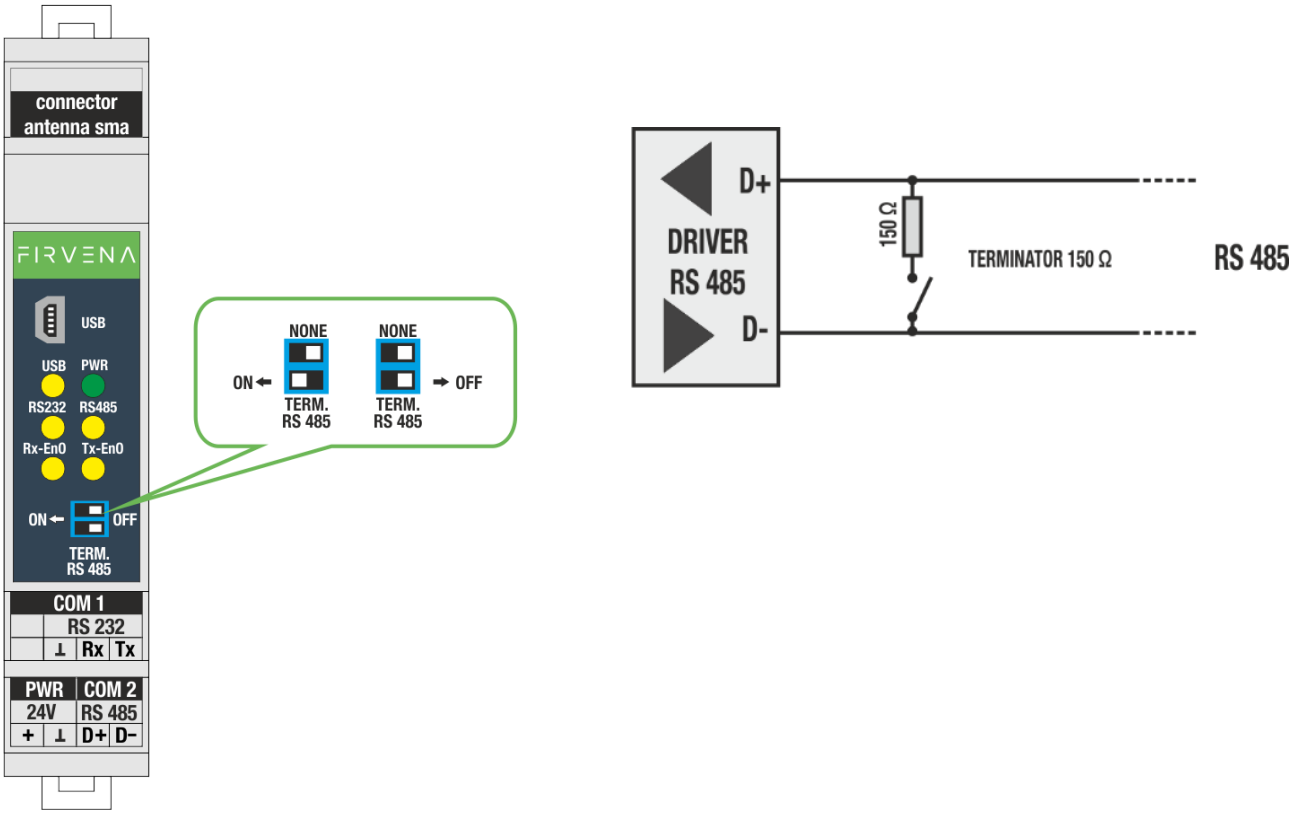

4 MODBUS RTU COMMUNICATION DESCRIPTION

Gateway receives data on frequency 868 MHz during its activity. It checks and processes these data. Valid data are saved into prepared registers. These registers are readable by MODBUS RTU protocol.

4.1 Register map

The registers are divided into several areas according to their use. All registers can be read by Modbus function 3 or 4. Readonly registers are marked as “R”, writable registers are marked as “R/W”.

Register map			
Area	**No**	**R/W**	**Description**
Rx data	0	R	Device 0
	10	R	Device 1
	20	R	Device 2
	…		
	399	R	Device 39
Rx config	400	R/W	Device 0
	410	R/W	Device 1
	420	R/W	Device 2
	…		
	799	R/W	Device 39
	…		
Telegram log	900	R	The log of received/sent telegrams
	…		
Service data	1000 - 1054	R/W	Gateway settings and status
	…		
Rx raw data	2000	R/W	Device 0
	2010	R/W	Device 1
	2020	R/W	Device 2
	…		
	2399	R/W	Device 39
	…		
Rx Pressac data	3000	R/W	Device 0
	3010	R/W	Device 1
	3020	R/W	Device 2
	…		
	3399	R/W	Device 39
	…		
Tx data	5000	R/W	Device 0
	5020	R/W	Device 1
	5040	R/W	Device 2
	…		
	6199	R/W	Device 59
	…		
Rx data 2	8000	R	Device 0
	8050	R	Device 1
	8100	R	Device 2
	…		
	9999	R	Device 39

Channel labels	10000	R/W	Device Rx 0 (40 chars)
	10100	R/W	Device Rx 1
	…		
	14000	R/W	Device Tx 0 (40 chars)
	…		
	19900	R/W	Device Tx 59

4.1.1 Register map – Rx data

Each device has 10 registers in which measured and converted values of supported sensors are saved, then there are saved information about signal strength, number of received telegrams, time from the last receiving, and indication of error.

Value1…Value6:

These registers contain the data decoded according to the EEP configured in registers RORG, FUNC and TYPE in *Rx config*. These include for example: measured values of temperature, humidity, CO2, state of contact, etc.

Signal strength:

The receiver measures signal strength during receiving of messages and it adds this value to the message. Then it is possible to find out how much is the signal from different transmitters damped. This value is dependent on distance, number of barriers, etc. Information about quality of received signal is very useful for change of receiver or transmitters position or for antenna selection.

Time from the last receiving:

The gateway counts time from the last received message for each position. It is possible to find out from this information for example, how outdated the temperature data are and if sensor did not stop to transmit. In case of use more receivers that receive the same transmitters, these data are decisive for selection of valid value. The value is in seconds.

Register map – Rx data			
	No	**R/W**	**Description**
Device 0	0	R	Value 1
	1	R	Value 2
	2	R	Value 3
	3	R	Value 4
	4	R	Value 5
	5	R	Value 6
	6	R	Signal strength
	7	R	Number of received telegrams
	8	R	Time from the last receiving
	9	R	Error
Device 1	10	R	Value 1
	11	R	Value 2
	12	R	Value 3
	13	R	Value 4
	14	R	Value 5
	15	R	Value 6
	16	R	Signal strength
	17	R	Number of received telegrams
	18	R	Time from the last receiving

	19	R	Error
	…		
Device 39	390	R	Value 1
	391	R	Value 2
	392	R	Value 3
	393	R	Value 4
	394	R	Value 5
	395	R	Value 6
	396	R	Signal strength
	397	R	Number of received telegrams
	398	R	Time from the last receiving
	399	R	Error

Rx data – Error register	
Value	**Meaning of value**
0 – OK	Telegram OK, data has been stored in Values
3 – NOT SUPPORTED	Unsupported device type, data cannot be converted to Values.[1)]
7 – TIMEOUT	120 minutes without a telegram received
255 – FREE	The channel is not configured, no device assigned

1) The raw data are copied to Values instead, the format is the same as for profiles F6-3F-7F, A5-3F-7F, D2-FF-FF.

4.1.2 Register map – Rx config

The *Rx config* table starts at the address 400. Device identification data are stored here. Ten registers are reserved for each device. Registers can be written separately using the F-06 function or in bulk using the F-16 function. F-16 can write multiple records, e.g. 100 registers from address 400 to 499, unused registers have any value.

ID0 – ID3 (SenderID): It determines the EnOcean ID of connected device.

RORG. FUNC, TYPE: It configures the type of the device (EEP).

RORG: It determines format of the EnOcean message (e.g.: RPS, 1BS, 4BS, VLD).

RORG can be set to values: 0xF6, 0xD5, 0xA5, 0xD2, 0xD1.

FUNC: It determines function of the device (e.g.: temperature sensor, humidity sensor, gas sensor, light sensor, motion sensor, switching contacts, switches, etc.).

TYPE: It determines type of device (e.g.: gas sensor – CO2, temperature sensor – from 0 to +40 °C, from -20 to +60 °C, etc.).

Register map – Rx config			
	No	**R/W**	**Description**
Device 0	400	R/W	ID0
	401	R/W	ID1
	402	R/W	ID2
	403	R/W	ID3
	404	R/W	RORG
	405	R/W	FUNC
	406	R/W	TYPE
	407	R/W	
	408	R/W	
	409	R/W	
Device 1	410	R/W	ID0
	411	R/W	ID1
	412	R/W	ID2
	413	R/W	ID3
	414	R/W	RORG
	415	R/W	FUNC
	416	R/W	TYPE
	417	R/W	
	418	R/W	
	419	R/W	
	…		
Device 39	790	R/W	ID0
	791	R/W	ID1
	792	R/W	ID2
	793	R/W	ID3
	794	R/W	RORG
	795	R/W	FUNC
	796	R/W	TYPE
	797	R/W	
	798	R/W	
	799	R/W	

4.1.3 Register map – Telegram log

This table allows to monitor all received or sent telegrams, it consists of several sub-tables of different meanings.

Rx data queue: a queue (FIFO memory) containing the last received telegrams, the capacity is 40 telegrams. *Rx data*, *Rx config* and *Rx raw data* registers capture information in the same format as used in the main tables – Ch. 4.1.1, 4.1.2, 4.1.5. The device number (Rx channel number) that the actual record belongs to is indicated by register 900. The next record is shown by reading the register 901.

Tx data queue: the queue (FIFO memory) containing the last sent telegrams, the capacity is 40 telegrams. *Tx data* registers capture information in the same format as used in the main tables – Ch. 4.1.7. The Tx channel number is indicated by register 960. Reading the register 961 moves to the next record.

Rx data iterator: these registers iterates through the *Rx data* table. It moves with every read of register 949.

Notes:

The entire *Telegram log* table can be read with a single query using function 3, thus getting the actual records and moving the queues in a single step.

When using the *Rx data* or *Rx raw data* table, a message may be lost if the time between two consecutive telegrams is shorter than refresh period of the Modbus client. *Rx data queue* ensures that no telegram is lost. It is a FIFO memory (first-in first-out), the oldest telegram is read first.

Using *Telegram log* also allows faster response if it is polled instead of *Rx data* or *Rx raw data* registers. It also allows more precise measurement of telegram timestamps.

Register map – Telegram log				
	No	**R/W**	**Description**	
Rx data queue	900	R	Device number (0-39; 0xFF – queue empty, all new messages are read)	
	901	R	Value 1 (reading this value moves the queue)	Rx data
	902	R	Value 2	
	903	R	Value 3	
	904	R	Value 4	
	905	R	Value 5	
	906	R	Value 6	
	907	R	Signal strength	
	908	R	Number of received telegrams	
	909	R	Time from the last receiving	
	910	R	Error	
	911	R	ID0	Rx config
	912	R	ID1	
	913	R	ID2	
	914	R	ID3	
	915	R	RORG	
	916	R	FUNC	
	917	R	TYPE	
	918	R	Number of messages remaining in the queue 0-40	Rx queue state
	919	R	Time from receiving this message in tens of ms – max. 65000 ms	
	920	R	(1) if the queue overflowed, (0) if not	
	921	R	Message serial number	
	…			
	930	R	Rx raw data 0	Rx raw data
	931	R	Rx raw data 1	
	932	R	Rx raw data 2	
	933	R	Rx raw data 3	
	934	R	Rx raw data 4	
	935	R	Rx raw data 5	
	936	R	Rx raw data 6	
	937	R	Rx raw data 7	
	938	R	Rx raw data 8	
	939	R	Rx raw data 9	
	…			
	…			
	945	R	Number of channel where the settings have just changed (0xFF – no channel)	
	…			
	…			

Rx data iterator	949	R	Device number (0-39) (reading this value moves the iterator)	Rx data from registers 0...399
	950	R	Value 1	
	951	R	Value 2	
	952	R	Value 3	
	953	R	Value 4	
	954	R	Value 5	
	955	R	Value 6	
	956	R	Signal strength	
	957	R	Number of received telegrams	
	958	R	Time from the last receiving	
	959	R	Error	
Tx data queue	960	R	Device number (0-59; 0xFF – queue empty, all new messages are read)	
	961	R	Sender ID0 (reading this value moves the queue)	Tx data
	962	R	Sender ID1	
	963	R	Sender ID2	
	964	R	Sender ID3	
	965	R	Dest. ID0	
	966	R	Dest. ID1	
	967	R	Dest. ID2	
	968	R	Dest. ID3	
	969	R	RORG	
	970	R	FUNC	
	971	R	TYPE	
	972	R	VALUE1	
	973	R	VALUE2	
	974	R	VALUE3	
	975	R	VALUE4	
	976	R	VALUE5	
	977	R	VALUE6	
	978	R	VALUE7	
	979	R	Learn	
	980	R	Number of messages remaining in the queue 0-40	Tx queue state
	981	R	Time from transmitting this message in tens of ms – max. 65000 ms	
	982	R	(1) if the queue overflowed, (0) if not	
	983	R	Message serial number	

4.1.4 Register map – Service data

These registers contain gateway settings, status information and communication statistics. Registers can be written using the function F-06.

Register map – Service data					
	No	**R/W**	**Description**		
				Default	
Service registers	1000	R	SW Version (e.g. 115 => V1.15)		
	1001	R/W	MODBUS address 1…247	1	COM2 RS485
	1002	R/W	Baudrate kBd x10 (1152 => 115.2 kBd)	9.6 kBd	
	1003	R/W	MODBUS address 1…247	1	COM1 RS232
	1004	R/W	Baudrate kBd x10 (1152 => 115.2 kBd)	9.6 kBd	
	1005	R/W	Stopbit (1:ONE; 2:TWO)	ONE	COM2 RS485
	1006	R/W	Parity (0: none, 1:ODD, 2:EVEN)	none	
	1007	R/W	Stopbit (1:ONE; 2:TWO)	ONE	COM1

	1008	R/W	Parity (0: none, 1:ODD, 2:EVEN)	none	RS232
	1009	R	HW version		
	1010	**R/W**	**Command** (see table below)		
	1011	**R**	**Status** (see table below)		
	1012	R	ID 0		New device (Last teach-in telegram)
	1013	R	ID 1		
	1014	R	ID 2		
	1015	R	ID 3		
	1016	R	RORG		
	1017	R	FUNC (9999 if not available)		
	1018	R	TYPE (9999 if not available)		
	1019	R	Manufacturer ID (9999 if not available)		
	1020	R	Signal strength		
	1021	R	Telegram counter 0-65000 (65534:no data; 0:ID changed – new device, after reading this 0, value 1 is set)		
	1022	R/W	LRN enable (channel number 0…39 or 65534:disabled)(see below)		
	1023				
	1024	R	Transceiver ID0		EnOcean transceiver
	1025	R	Transceiver ID1		
	1026	R	Transceiver ID2		
	1027	R	Transceiver ID3		
	1028	R	Transceiver APP version		
	1029	R	Transceiver API version		
	1030	R	Number of received messages		PORT RS485
	1031	R	Number of sent messages		
	1032	R	Number of error messages		
	1040	R	Number of received messages		PORT RS232
	1041	R	Number of sent messages		
	1042	R	Number of error messages		
	1050	R	Number of received messages		PORT USB
	1051	R	Number of sent messages		
	1052	R	Number of error messages		
	1053	R/W	Added delay between request and response 0-200 ms	0 ms	PORT RS485
	1054	R/W	Added delay between r request and response 0-200 ms	0 ms	PORT RS232
	1060	R/W	Repeater 0:OFF (default); 1:LEVEL1 (only original telegrams); 2:LEVEL2 (original and once repeated telegrams)		
	1065	R/W	Turns off MODBUS CRC check, for debug only (1:CRC ON (default); 0:CRC OFF)		

Register map – Service data – Address 1010 – COMMAND	
Value	**Meaning of value**
0x0Fxx	Delete Device in *Rx config* (0x0F00 – position 0, 0x0F01, … 0x0F27 – position 39)
0x1Fxx	Delete Device in *Tx data* (0x1F00 – position 0 … 0x1F3B – position 59)
0x09xx	Save new device to *Rx config* (0x0900 – position 0, 0x0901, … 0x0927 – position 39) Last received teach-in data (address 1012) will be saved to the position in *Rx config*.
0x11AA	Software reset of the gateway

Register map – Service data – Address 1011 – Status		
Value	**Meaning of value**	
0x1100	Start – without reprogramming	Startup code
0x1101	Start – reprogramming failed (CRC does not match or other error)	
0x1102	Start – new program is the same as the current one	
0x1103	Start – reprogramming successful	
0xFFFF	Command was executed successfully	Command result code
0xEEE1	Error – Unknown position	
0xEEE2	Error – Unknown command	

LRN enable – bidirectional teach-in mode (since firmware V1.18)

It enables the bidirectional teach-in mode for the selected Rx channel 0…39. The gateway will wait for a teach-in telegram, the first received device will be automatically saved to the selected Rx channel. A Tx channel with the same number will also be configured for the device and a teach-in response will be sent.

The teach-in mode is automatically disabled after 5 minutes if no teach-in request is received.

EnOcean REPEATER

The repeater mode is changed by register 1060. If repeater is enabled, it forwards received telegrams in the EnOcean network, which can extend the signal range of surrounding devices. This can be used when there are two EnOcean devices that talks directly with each other and the gateway lies between them. The main function of the gateway is not affected by the repeater function.

Level 2 repeating should only be activated after careful study of the radio conditions. Otherwise, the function of the system may be compromised by collisions of telegrams.

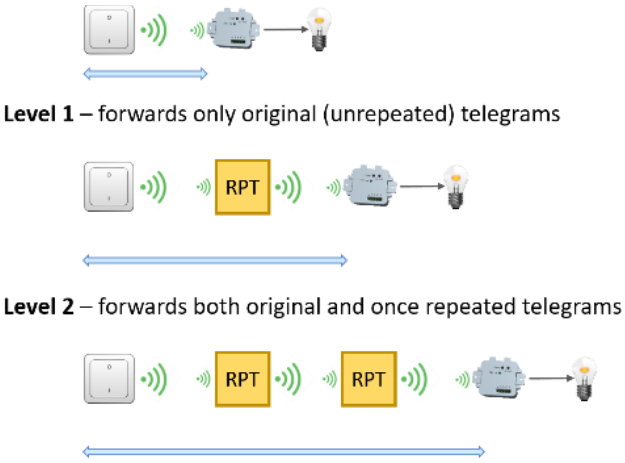

4.1.5 Register map – Rx raw data

These registers contain the payload bytes as received in the last telegram from the assigned device. The EnOcean ID of the device is also included. Ten registers are reserved for each device. The length of the data varies depending on the telegram type, which is identified by the RORG byte.

VLD and MSC telegrams have variable data length up to 14 bytes for unaddressed telegrams (broadcast) and 9 for addressed telegrams. The information about their length is not provided here, the unused bytes are zero.

In most cases, it is not necessary to use these registers and *Value* registers in *Rx data* should be used instead.

Example 4BS: EEP A5-02-05, ID 05-87-21-D2, temperature 22 °C

Example RPS: EEP F6-02-01, ID FE-E3-18-CE, button B-I pressed

Example VLD: EEP D2-01-0B, ID 05-01-7F-50, CMD 4 – turned on 100 %

Register map – Rx raw data				
	No	**R/W**	**Description**	**Example**
Device 0 (4BS)	2000	R	ID 0	0xD2
	2001	R	ID 1	0x21
	2002	R	ID 2	0x87
	2003	R	ID 3	0x05
	2004	R	RORG = 0xA5	0xA5
	2005	R	DB 0	0x08
	2006	R	DB 1	0x73
	2007	R	DB 2	0x00
	2008	R	DB 3	0x00
	2009	R	Status byte	0x00
Device 1 (RPS, 1BS)	2010	R	ID 0	0xCE
	2011	R	ID 1	0x18
	2012	R	ID 2	0xE3
	2013	R	ID 3	0xFE
	2014	R	RORG = 0xF6 or 0xD5	0xF6
	2015	R	DB 0	0x50
	2016	R		
	2017	R		
	2018	R		
	2019	R	Status byte	0x30
	…			
Device 39 (VLD, MSC)	2390	R	Hi byte ID 1; Lo Byte ID 0	0x7F50
	2391	R	Hi byte ID 3; Lo Byte ID 2	0x0501
	2392	R	RORG = 0xD2 or 0xD1	0xD2
	2393	R	Hi DB1; Lo DB0	0x60E4
	2394	R	Hi DB3; Lo DB2	0x0004
	2395	R	Hi DB5; Lo DB4	0x0000
	2396	R	Hi DB7; Lo DB6	0x0000
	2397	R	Hi DB9; Lo DB8	0x0000
	2398	R	Hi DB11; Lo DB10	0x0000
	2399	R	Hi DB13; Lo DB12	0x0000

4.1.6 Register map – Rx Pressac data

Customer solution for the company Pressac Communications Ltd. It is used to monitor electric current with A.C. Current Clamps (EEP D2-32-00, 01, 02). Kept for legacy applications, use *Rx data* for new applications.

Register map – Rx Pressac data			
	No	**R/W**	**Description**
Device 0	3000	R	ID 3 Hi , ID2 Lo
	3001	R	ID 1 Hi , ID0 Lo
	3002	R	Telegram type (0,1,2)
	3003	R	Power fail (1,0)
	3004	R	Divisor (1,0)
	3005	R	0 (reserved)

	3006	R	Value 1 (Type 0, Type 1, Type 2)
	3007	R	Value 2 (Type 1, Type 2) (0xFFFF for Type 0)
	3008	R	Value 3 (Type 2) (0xFFFF for Type 0, Type1)
	3009	R	Reserved (0xFFFF for Type 0, Type1) (0 for Type 2)
Device 1	3010	R	ID 3 Hi , ID2 Lo
	3011	R	ID 1 Hi , ID0 Lo
	3012	R	Telegram type (0,1,2)
	3013	R	Power fail (1,0)
	3014	R	Divisor (1,0)
	3015	R	0 (reserved)
	3016	R	Value 1 (Type 0, Type 1, Type 2)
	3017	R	Value 2 (Type 1, Type 2) (0xFFFF for Type 0)
	3018	R	Value 3 (Type 2) (0xFFFF for Type 0, Type1)
	3019	R	Reserved (0xFFFF for Type 0, Type1) (0 for Type 2)
	…		
Device 39	3390	R	ID 3 Hi , ID2 Lo
	3391	R	ID 1 Hi , ID0 Lo
	3392	R	Telegram type (0,1,2)
	3393	R	Power fail (1,0)
	3394	R	Divisor (1,0)
	3395	R	0 (reserved)
	3396	R	Value 1 (Type 0, Type 1, Type 2)
	3397	R	Value 2 (Type 1, Type 2) (0xFFFF for Type 0)
	3398	R	Value 3 (Type 2) (0xFFFF for Type 0, Type1)
	3399	R	Reserved (0xFFFF for Type 0, Type1) (0 for Type 2)

4.1.7 Register map – Tx data

Registers starting from address 5000 are used for telegram transmission. There are 60 transmitting channels, each channel has 20 registers where telegram data is prepared and sent. Registers can be written separately using the F-06 function or in bulk using the F-16 function. F-16 can write multiple records. Transmit commands are written by F-06 to *Send option* register, F-16 can write only *Send option* = 0 or 3.

SenderID: ID of this device, it means gateway. Possible values are:

- EURID of the gateway (registers 1024…1027), write 00-00-00-00 to use EURID.
- One of the 127 IDs derived from Base ID, write ID from range FF-FF-FF-01…7F.
  Example: Base ID is FF-90-E9-00, written SenderID value FF-FF-FF-1A, the channel will use ID = Base ID + 1A = FF-90-E9-1A.
  In the current version the base ID is fixed FF-FF-FF-00 and cannot be changed.

EURID is unique, BaseID is not. Base ID enables device simulation, because the gateway can transmit under different IDs.

DestinationID: ID of the target device, e.g. controlled relay switch.

- Addressed communication: set the ID of the target EnOcean device. In bidirectional communication, it is the same as ID of the assigned device in Rx channels.
- Unaddressed communication (Broadcast): use 00-00-00-00 or FF-FF-FF-FF, both sends FF-FF-FF-FF.

EEP: It configures the type of the device (EEP).

Values1…Values7: these registers contain the data to be encoded according to the EEP configured in registers RORG, FUNC and TYPE.

Learn button: when ticked and RORG is A5 or D5, the channel will send a teach-in telegram.

Send option: this register is used to control sending of the telegram. The option *4 – UTE response once* enables UTE teach-in mode for the channel.

Register map – Tx data			
	No	**R/W**	**Description**
Device 0	5000	R/W	Sender ID0
	5001	R/W	Sender ID1
	5002	R/W	Sender ID2
	5003	R/W	Sender ID3
	5004	R/W	Destination ID0
	5005	R/W	Destination ID1
	5006	R/W	Destination ID2
	5007	R/W	Destination ID3
	5008	R/W	RORG
	5009	R/W	FUNC
	5010	R/W	TYPE
	5011	R/W	VALUE1
	5012	R/W	VALUE2
	5013	R/W	VALUE3
	5014	R/W	VALUE4
	5015	R/W	VALUE5
	5016	R/W	VALUE6
	5017	R/W	VALUE7
	5018	R/W	Learn button
	5019	W	Send option 1 – Send now 2 – Response on received once (Destination ID must be set) 3 – Response on received always (Destination ID must be set) [1)] 4 – UTE response once 101 – Send this now and next after 100ms [2)] 102 – Send this now and next after 150ms 103 – Send this now and next after 200ms 104 – Send this now and next after 250ms 105 – Send this now and next after 300ms 106 – Send this now and next after 350ms 107 – Send this now and next after 400ms 108 – Send this now and next after 450ms 109 – Send this now and next after 500ms 110 – Send this now and next after 550ms 111 – Send this now and next after 600ms
Device 1	5020	R/W	Sender ID0
	5021	R/W	Sender ID1
	5022	R/W	Sender ID2
	5023	R/W	Sender ID3
	5024	R/W	Destination ID0
	5025	R/W	Destination ID1
	5026	R/W	Destination ID2
	5027	R/W	Destination ID3
	5028	R/W	RORG
	5029	R/W	FUNC
	5030	R/W	TYPE

	5031	R/W	VALUE1
	5032	R/W	VALUE2
	5033	R/W	VALUE3
	5034	R/W	VALUE4
	5035	R/W	VALUE5
	5036	R/W	VALUE6
	5037	R/W	VALUE7
	5038	R/W	Learn button
	5039	W	Send option
	…		
Device 59	6180	R/W	Sender ID0
	…		
	6199	W	Send option

1) *Automatic response used for heating valves A5-20-01, A5-20-06. Destination ID is the ID of the valve.*

2) *These options are used to simulate RPS communication. Two adjacent channels are sent, e.g. This TxCh1 ->delay 300 ms -> Next TxCh2.*

4.1.8 Register map – Channel labels

These registers serve to store short descriptions of channels. The total number of labels is 100, 40 for Rx channels and 60 for Tx channels. 100 registers are reserved for each channel in the range of 10000…19999. Registers can only be written using function F-16. The whole text must be written. The text length is derived from the position of the null character or from the number of registers in the F-16 request. The maximum length is 40 characters.

Register map – Channel labels				
	No	**R/W**	**Description**	**Example**
Device Rx 0	10000	R	Index	0
	10001	R	Length of the text (0…40)	12
	10002	R/W	Text[0]	„T“ (First ascii char 0x54)
	10003	R/W	Text[1]	„e“ (0x65)
	…	R/W		„mperatu“
	10011	R/W	Text[9]	„r“ (0x72)
	10012	R/W	Text[10]	„e“ (0x65)
	10013	R/W	Text[11]	„1“ (0x31)
	…	R/W	0	
	10099	R	0	
Device Rx 1	10100	R	Index	1
	10101	R	Length of the text (0…40)	12
	10102	R/W	Text[0]	„T“ (First ascii char 0x54)
	10103	R/W	Text[1]	„e“ (0x65)
	…	R/W		„mperatu“
	10111	R/W	Text[9]	„r“ (0x72)
	10112	R/W	Text[10]	„e“ (0x65)
	10113	R/W	Text[11]	„2“ (0x32)
	…	R/W	0	
	10199	R	0	
	…			
Device Rx 39	13900	R	Index	39
Device Tx 0	14000	R	Index	40
	…			

Device Tx 59	19900	R	Index	99
	…	R/W		
	19999	R		

4.1.9 Register map – Rx data 2

There can be devices with more than six values, for example, D2-14-5C has 9 values. The values in *Rx data* are truncated for such devices because there are only six value registers in *Rx data.* The full array of values can be read here. Each device has 50 registers in which measured and converted values of supported sensors are saved.

Register map – Rx data 2				
	No	**R/W**	**Description**	
Device 0	8000	R	Value 1	
	8001	R	Value 2	
	8002	R	Value 3	
	…	R		
	8019	R	Value 20	
	…	R		
	8040	R	bits [15:8]	Sender ID3
			bits [8:0]	Sender ID2
	8041	R	bits [15:8]	Sender ID1
			bits [8:0]	Sender ID0
	8042	R	0	
	8043	R	0	
	8044	R	Signal strength	
	8045	R	Number of received telegrams	
	8046	R	Time from the last receiving	
	8047	R	0	
	8048	R	0	
	8049	R	Error	
Device 1	8050	R	Value 1	
	…	R		
	8096	R	Time from the last receiving	
	8097	R	0	
	8098	R	0	
	8099	R	Error	
	…			
Device 39	9950	R	Value 1	
	…	R		
	9996	R	Time from the last receiving	
	9997	R	0	
	9998	R	0	
	9999	R	Error	

4.2 Supported functions

According to the application layer specification, a client can read a maximum of 125 registers and write a maximum of 123 registers in a single request.

Inside the defined areas, the server allows reading any register, it returns zeros for unused registers. Outside these areas, all requests returns zero too.

Code	Name	Description
3 (0x03)	Read Holding Registers	Reads a continuous block of registers starting at a given address. Zero values are returned for unused registers.
6 (0x06)	Write Single Register	Writes any writable register.
16 (0x10)	Write Multiple Registers	Writes a block of writable registers, behavior may differ depending on the area.

5 Software tool EnOcean Tools

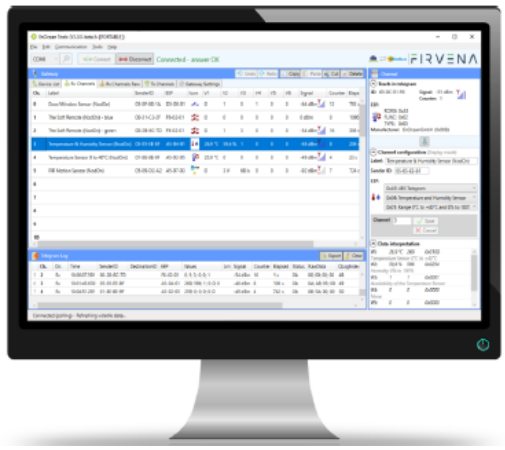

The tool is prepared for simple administration of all elements serviced with gateway through you can connect or disconnect EnOcean elements to and from gateway, monitor their states, values, communication intervals and signal strength. Another useful function is the possibility to control EnOcean elements from the gateway side. When there are installed more gateways, the tool enables to monitor and compare on which gateway each element has better signal and to assign the element with better signal to its gateway. You can assign the elements on position with use of ID number manually or automatically. The type of communication (RS 232, RS 485, USB) and baud rate can be set with this software. The baud rate for USB is fixed at 115.2 kBd.

Download the latest EnOcean Tools application and user manual at www.firvena.com -> SUPPORT/DOWNLOAD/ENOCEAN-GWY-MOD.

6 Supported EEPs for receiving data

Following tables list supported device types (EEPs) for receiving data. The support includes decoding of data points from received raw data bytes and writing them to registers *Value1…Value6* in *Rx data* and *Value1…Value20* in *Rx data 2*. The gateway can also handle the bidirectional communication of heating valves (A5-20-01, A5-20-06) – automatic response. If the EEP lacks a description of the values, then the order and meaning of values is the same as in the EEP specification.

For unsupported EEPs, raw data is displayed in *Value* registers. The format is described in universal profiles F6-3F-7F, D5-3F-7F, A5-3F-7F, D2-FF-FF and D1-FF-FF. Universal profiles can also be set for any device manually.

Sometimes we encounter devices using more than one EEP (different RORGs) concurrently, with the same or different Sender ID. The solution is to use one channel for each EEP. The telegram is only received if its RORG equals to the RORG of the Rx channel.

6.1 Supported RPS telegrams

F6-01-xx Push button		
EEP	**Registers**	**Description**
F6-01-01	Value1	Actual button state (0:released; 1:pressed)
	Value2	Previous button state
	Value3	Before previous button state
	Value4	reserved
	Value5	Energy bow (0: released; 1: pressed < 500 ms; 2: pressed > 500 ms)
	Value6	Number of incoming telegrams from the last Modbus read of V1 (0…3)

F6-02-xx Rocker switch, 2 Rocker		
EEP	**Registers**	**Description**
F6-02-01 F6-02-02 F6-02-04	Value1	Actual button code (0…4) 0: Button released 1: Button A-I 2: Button A-0 3: Button B-I 4: Button B-0
	Value2	Previous button code
	Value3	Before previous button code
	Value4	Second action valid (0/1)
	Value5	Energy bow (0: released; 1: pressed < 500 ms; 2: pressed > 500 ms)
	Value6	Number of incoming telegrams from the last Modbus read of V1 (0…3)
F6-02-03	Value1	Actual button code 0x30: Button A-0: Set the controller in automatic mode 0x10: Button A-I: Set the controller in manually mode and toggles between switch light on and switch light off 0x70: Button B-0: Dim light up 0x50: Button B-I: Dim light down
	Value2	Previous button code
	Value3	Before previous button code
	Value4	2Before previous button code
	Value5	Energy bow (0: released; 1: pressed < 500 ms; 2: pressed > 500 ms)
	Value6	Number of incoming telegrams from the last Modbus read of V1 (0…4)

F6-03-xx Rocker switch, 4 Rocker			
EEP	**Registers**	**Description**	
F6-03-01 F6-03-02	Value1	Actual button code (0…4) 0: Button released 1: Button A-I 2: Button A-0 3: Button B-I 4: Button B-0	 5: Button C-I 6: Button C-0 7: Button D-I 8: Button D-0
	Value2	Previous button code	
	Value3	2Before previous button code	
	Value4	Second action valid (0/1)	
	Value5	Energy bow (0: released; 1: pressed < 500 ms; 2: pressed > 500 ms)	
	Value6	Number of incoming telegrams from the last Modbus read of V1 (0…3)	

F6-04-xx Card switch		
EEP	**Registers**	**Description**
F6-04-01 F6-04-02	Value1	Card state (0:removed; 1:inserted)
	Value2	Last value
	Value3-6	0

F6-05-xx Detectors		
EEP	**Registers**	**Description**
F6-05-00 F6-05-02	Value1	Alarm Triggered (0:false; 1:true)
	Value2	Battery Low (0:false; 1:true)
F6-05-01	Value1	Water Alert (0:false; 1:true)

F6-10-xx Window handle		
EEP	**Registers**	**Description**
F6-10-00 F6-10-01	Value1	Handle Position (0:Closed; 1:Open; 2:Up)
	Value2	DB0

F6-3F-7F Universal		
EEP	**Registers**	**Description**
F6-3F-7F	Value1	DB0: DataBytes[0]
	Value2	Status byte

6.2 Supported 1BS telegrams

D5-00-xx Door/Window contact		
EEP	**Registers**	**Description**
D5-00-01	Value1	Actual Contact State (0:open; 1:closed)
	Value2	Last contact state
	Value3	Before last contact state
	Value4	2Before last contact state
	Value5	3Before last contact state
	Value6	Number of incoming messages from the last reading of the value 1 (max. 5)

D5-3F-7F Universal		
EEP	**Registers**	**Description**
D5-3F-7F	Value1	DB0: DataBytes[0]

6.3 Supported 4BS telegrams

A5-02-xx Temperature sensors		
EEP	**Registers**	**Description**
A5-02-01	Value1	Temperature -40 … 0 °C (x10)
A5-02-02	Value1	Temperature -30 … +10 °C (x10)
A5-02-03	Value1	Temperature -20 … +20 °C (x10)

A5-02-04	Value1	Temperature -10 … +30 °C (x10)
A5-02-05	Value1	Temperature 0 … +40 °C (x10)
A5-02-06	Value1	Temperature +10 ...+50 °C (x10)
A5-02-07	Value1	Temperature +20 ... +60 °C (x10)
A5-02-08	Value1	Temperature +30 ... +70 °C (x10)
A5-02-09	Value1	Temperature +40 ... +80 °C (x10)
A5-02-0A	Value1	Temperature +50 ... +90 °C (x10)
A5-02-0B	Value1	Temperature +60 ... +100 °C (x10)
A5-02-10	Value1	Temperature -60 … +20 °C (x10)
A5-02-11	Value1	Temperature -50 … +30 °C (x10)
A5-02-12	Value1	Temperature -40 … +40 °C (x10)
A5-02-13	Value1	Temperature -30 … +50 °C (x10)
A5-02-14	Value1	Temperature -20 … +60 °C (x10)
A5-02-15	Value1	Temperature -10 … +70 °C (x10)
A5-02-16	Value1	Temperature 0 … +80 °C (x10)
A5-02-17	Value1	Temperature +10 … +90 °C (x10)
A5-02-18	Value1	Temperature +20 … +100 °C (x10)
A5-02-19	Value1	Temperature +30 … +110 °C (x10)
A5-02-1A	Value1	Temperature +40 … +120 °C (x10)
A5-02-1B	Value1	Temperature +50 … +130 °C (x10)
A5-02-20	Value1	Temperature -10 … +41,2 °C (x10)
A5-02-30	Value1	Temperature -40 … +62,3 °C (x10)

A5-04-xx Temperature and humidity sensors		
EEP	**Registers**	**Description**
A5-04-01	Value1	Temperature 0 … +40 °C (x10)
	Value2	Relative humidity 0 … 100 % (x10)
	Value3	Temperature sensor: 1 - available 0 - not available
A5-04-02	Value1	Temperature -20 … +60 °C (x10)
	Value2	Relative humidity 0 … 100 % (x10)
	Value3	Temperature sensor: 1 - available 0 - not available
A5-04-03	Value1	Temperature -20 … +60 °C (x10) - resolution 10bit
	Value2	Relative humidity 0 … 100 % (x10)
	Value3	Telegram type: 1 – Event triggered 0 - heartbeat

A5-05-xx Pressure sensors		
EEP	**Registers**	**Description**
A5-05-01	Value1	Pressure 500 … 1150 hPa
	Value2	Telegram type: 1 – Event triggered 0 - heartbeat
	Value3	Temperature sensor: 1 - available 0 - not available

A5-06-xx Light sensors		
EEP	**Registers**	**Description**
A5-06-01	Value1	Supply voltage 0… 5.1 V (x100)
	Value2	Illumination 300-60000lx (/10) value 300-6000
	Value3	Range
A5-06-02	Value1	Supply voltage 0… 5.1V (x100)
	Value2	Illumination 0-1020lx
	Value3	Range

A5-06-03	Value1	Supply voltage 0… 5.1 V (x100)
	Value2	Illumination 0-1000lx
A5-06-04	Value1	Temperature -20°C … 60°C
	Value2	Illumination 0-65535lx (/10) value 0-6553
	Value3	Energy storage 0…100%
	Value4	Valid temperature data 0 … 1
	Value5	Valid storage data 0 … 1
A5-06-05	Value1	Supply voltage 0…5.1 V (x100)
	Value2	Illumination 0-10200lx
	Value3	Range

A5-07-xx PIR sensors		
EEP	**Registers**	**Description**
A5-07-01	Value1	0 - PIR off … 1 – PIR on
	Value2	Supply voltage 0… 5.0V (x10)
	Value3	Supply voltage availability: 0 – Supply voltage is not supported 1- Supply voltage is supported
A5-07-02	Value1	0 – Uncertain of occupancy status … 1 – Motion detect
	Value2	Supply voltage 0… 5.0 V (x10)
A5-07-03	Value1	0 - PIR off … 1 – PIR on
	Value2	Supply voltage 0… 5.0 V (x10)
	Value3	Illumination 0…1000 lx

A5-08-xx Light, temperature and PIR sensors		
EEP	**Registers**	**Description**
A5-08-01	Value1	0 - PIR off … 1 – PIR on
	Value2	Supply voltage 0… 5.1 V (x10)
	Value3	Button occupancy 1 – preset 0- released
	Value4	Illumination 0 … 510 lx
	Value5	Temperature 0 … 51 °C (x10)
A5-08-02	Value1	0 - PIR off … 1 – PIR on
	Value2	Supply voltage 0… 5.1 V (x10)
	Value3	Button occupancy 1 – preset 0- released
	Value4	Illumination 0 … 1020 lx
	Value5	Temperature 0 … 51 °C (x10)
A5-08-03	Value1	0 - PIR off … 1 – PIR on
	Value2	Supply voltage 0… 5.1 V (x10)
	Value3	Button occupancy 1 – preset 0- released
	Value4	Illumination 0 … 1530 lx
	Value5	Temperature -30 … 50 °C (x10)

A5-09-xx Environmental sensors VOC, CO, CO_2, dust, radon		
EEP	**Registers**	**Description**
A5-09-02	Value1	CO conc. 0…1020ppm
	Value2	Supply voltage 0… 5.1 V (x10)
	Value3	Temperature 1…51°C (x10)
	Value6	0 - Temper. Sensor not available 1 – Temperature sensor available
A5-09-04	Value1	CO_2 conc. 0…2550ppm increment = 10ppm
	Value2	Relative Humidity 0…100% (x10) res. 0,5%
	Value3	Temperature 1…51°C (x10)

	Value4	0		
	Value5	0 - Humidity Sensor not available 1 – Humidity sensor available		
	Value6	0 - Temper. Sensor not available 1 – Temperature sensor available		
A5-09-05	Value1	VOC con. 0 …65535 ppb		
	Value2	VOC ID 0: VOCT (total) 1: Formaldehyde 2: Benzene 3: Styrene 4: Toluene 5: Tetrachloroethylene 6: Xylene 7: n-Hexane 8: n-Octane 9: Cyclopentane	10: Methanol 11: Ethanol 12: 1 – Pentanol 13: Acetone 14: ethylene Oxide 15: Acetaldehyde ue 16: Acetic Acid 17: Propionice Acid 18: Valeric Acid 19: Butyric Acid	20: Ammoniac 22: Hydrogen Sulfide 23: Dimethylsulfide 24: 2 – Butanol (butyl Alcohol) 25: 2 – Methylpropanol 26: Diethyl ether 27: VOC-Index 255: ozone
	Value3	Scale Multiplier 0: 0.01 1: 0.1	2: 1 3: 10	
A5-09-06	Value1	Radon activity 0 …1023 Bq/m^3		
A5-09-07	Value1	Dust less than 10 µm (PM10) 0...511 0...511 µg/m^3		
	Value2	Dust less than 2.5 µm (PM2.5) 0...511 0...511 µg/m^3		
	Value3	Dust less than 1 µm (PM1) 0...511 0...511 µg/m^3		
	Value4	0: PM10 not active 1: PM10 active		
	Value5	0: PM2.5 not active 1: PM2.5 active		
	Value6	0: PM1 not active 1: PM1 active		
A5-09-08	Value1	CO_2 0 – 2000 ppm (Pure sensor)		
A5-09-09	Value1	CO_2 0 – 2000 ppm (Pure sensor)		
	Value2	Power failure detection (0/1)		
A5-09-0A	Value1	Hydrogen conc. 0…65535 ppm		
	Value2	Temperature -20…60 °C (x10)		
	Value3	Supply Voltage 2…5 V (x10)		
	Value4	Temperature available (0/1)		
	Value5	Supply voltage available (0/1)		
A5-09-0B	Value1	Radioactivity 0…65535		
	Value2	Multiplier		
	Value3	Supply Voltage 2…5 V (x10)		
	Value4	Unit		
	Value5	Supply voltage available (0/1)		
A5-09-0C	Value1	VOC Concentration 0…65535		
	Value2	VOC Type		
	Value3	Multiplier		
	Value4	Unit		

A5-10-xx Room Operating Panel			
EEP	**Registers**	**Description**	
A5-10-01	Value1	Actual temperature 0…+40°C (x10)	
	Value2	Setpoint 0-255	
	Value3	Button occupancy 1 – preset 0- released	
	Value4	Turn-switch for fan speed Enum:	210...255: Stage Auto 190...209: Stage 0 165...189: Stage 1 145...164: Stage 2

			0...144: Stage 3
	Value5	Stage 0,1,2,3, (255=AUTO)	
	Value6	Reserved	
A5-10-02	Value1	Actual temperature 0…+40°C (x10)	
	Value2	Setpoint 0-255	
	Value3	Slide switch or Slide switch Day/Night 1 – day(sw1) 0- night(sw0)	
	Value4	Turn-switch for fan speed Enum	210...255: Stage Auto 190...209: Stage 0 165...189: Stage 1 145...164: Stage 2 0...144: Stage 3
	Value5	Stage 0,1,2,3, (255=AUTO)	
	Value6	reserved	
A5-10-03	Value1	Actual temperature 0…+40°C (x10)	
	Value2	Setpoint 0-255	
	Value3	reserved	
	Value4	reserved	
	Value5	reserved	
	Value6	reserved	
A5-10-04	Value1	Actual temperature 0…+40°C (x10)	
	Value2	Setpoint 0-255	
	Value3	reserved	
	Value4	Turn-switch for fan speed Enum	210...255: Stage Auto 190...209: Stage 0 165...189: Stage 1 145...164: Stage 2 0...144: Stage 3
	Value5	Stage 0,1,2,3, (255=AUTO)	
	Value6	reserved	
A5-10-05	Value1	Actual temperature 0…+40°C (x10)	
	Value2	Setpoint 0-255	
	Value3	Button occupancy 1 – preset 0- released	
	Value4	reserved	
	Value5	reserved	
	Value6	reserved	
A5-10-06	Value1	Actual temperature 0…+40°C (x10)	
	Value2	Setpoint 0-255	
	Value3	slide switch or Slide switch Day/Night	0: Position I / Night /Off 1: Position O / Day /On
	Value4	reserved	
	Value5	reserved	
	Value6	reserved	
A5-10-07	Value1	Actual tempetature 0…+40°C (x10)	
	Value2	reserved	
	Value3	reserved	
	Value4	Turn-switch for fan speed Enum:	210...255: Stage Auto 190...209: Stage 0 165...189: Stage 1 145...164: Stage 2 0...144: Stage 3
	Value5	Stage 0,1,2,3, (255=AUTO)	
	Value6	Reserved	
A5-10-08	Value1	Actual tempetature 0…+40°C (x10)	

	Value2	Reserved	
	Value3	Button occupancy 1 – preset 0- released	
	Value4	Turn-switch for fan speed Enum	210...255: Stage Auto 190...209: Stage 0 165...189: Stage 1 145...164: Stage 2 0...144: Stage 3
	Value5	Stage 0,1,2,3, (255=AUTO)	
	Value6	reserved	
A5-10-09	Value1	Actual tempetature 0…+40°C (x10)	
	Value2	reserved	
	Value3	Slide switch or Slide switch Day/Night 1 – day(sw1) 0- night(sw0)	
	Value4	Turn-switch for fan speed Enum	210...255: Stage Auto 190...209: Stage 0 165...189: Stage 1 145...164: Stage 2 0...144: Stage 3
	Value5	Stage 0,1,2,3, (255=AUTO)	
	Value6	reserved	
A5-10-0A	Value1	Actual tempetature 0…+40°C (x10)	
	Value2	Setpoint 0-255	
	Value3	Contact state 0 – Close; 1- Open	
	Value4	Reserved	
	Value5	Reserved	
	Value6	Reserved	
A5-10-0B	Value1	Actual tempetature 0…+40°C (x10)	
	Value2	Reserve	
	Value3	Button occupancy 1 – preset 0- released	
	Value4	reserved	
	Value5	reserved	
	Value6	reserved	
A5-10-0C	Value1	Actual tempetature 0…+40°C (x10)	
	Value2	Setpoint 0-255	
	Value3	slide switch or Slide switch Day/Night	0: Position I / Night /Off 1: Position O / Day /On
	Value4	reserved	
	Value5	reserved	
	Value6	reserved	
A5-10-0D	Value1	Actual tempetature 0…+40°C (x10)	
	Value2	reserved	
	Value3	slide switch or Slide switch Day/Night	0: Position I / Night /Off 1: Position O / Day /On
A5-10-10	Value1	Actual temperature 0…+40°C (x10)	
	Value2	Setpoint 0-255	
	Value3	Button occupancy 1 – preset 0- released	
	Value4	Humidity 0…100%	
	Value5	Reserved	
	Value6	Reserved	
A5-10-11	Value1	Actual temperature 0…+40°C (x10)	
	Value2	Setpoint 0-255	
	Value3	Slide switch or Slide switch Day/Night 1 – day(sw1) 0- night(sw0)	
	Value4	Humidity 0…100%	
	Value5	Reserved	

	Value6	Reserved
A5-10-12	Value1	Actual temperature 0…+40°C (x10)
	Value2	Setpoint 0-255
	Value3	Reserved
	Value4	Humidity 0…100%
	Value5	Reserved
	Value6	Reserved
A5-10-13	Value1	Actual temperature 0…+40°C (x10)
	Value2	Reserved
	Value3	Button occupancy 1 – preset 0- released
	Value4	Humidity 0…100%
	Value5	Reserved
	Value6	Reserved
A5-10-14	Value1	Actual temperature 0…+40°C (x10)
	Value2	Reserved
	Value3	Button occupancy 1 – preset 0- released
	Value4	Humidity 0…100%
	Value5	Reserved
	Value6	Reserved
A5-10-20	Value1	Actual temperature 0…+40°C (x10)
	Value2	Setpoint 0…255
	Value3	Heating mode 0, 1, 2, 3 Reserved
	Value4	Battery change needed 1: battery low 0 :battery ok
	Value5	Reserved
	Value6	Reserved
A5-10-15 … A5-10-23		

A5-11-xx Controller status
A5-11-01
A5-12-xx Automated meter reading
A5-12-00 … A5-12-04, A5-12-10
A5-13-xx Environmental applications
A5-13-01 … A5-13-04
A5-14-xx Multi-func sensor
A5-14-01 … A5-14-0A

A5-30-xx Digital input		
EEP	**Registers**	**Description**
A5-30-01	Value1	Contact (0:open; 1:closed)
	Value2	Battery low (0:ok; 1:low)
A5-30-02 … A5-30-06 Value order and meaning same as EEP definitions. Temperature is (x10), Supply voltage (x100)		

A5-20-xx Actuators				
EEP	**Registers**	**Description**		
A5-20-01	Value1	Actuator position 0…100 %		
	Value2	Actual temperature from actuator 0…+40°C (x10)		
	Value3	1-Service on		
	Value4	1-Detection Window open		
	Value5	1 Energy input enabled (MVA004 Active energy harvesting (valve is hot)) 10 Energy storage (MVA004 - Energy storage sufficiently filled)		
	Value6	1 Failure temperature sensor 10 Actuator obstructed (MVA004 motor failure) 100 Cover open 1000 Batery – change battery next day 1111 + Batery – change battery next day + Cover open + Actuator obstructed + Failure temperature sensor		
A5-20-04	Value1	Actuator position 0…100 %		
	Value2	Room Temperature 10...30 °C		
	Value3	Feed Temperature 20 .. 80°C		
	Value4	Temperature Set Point 10 .. 30°C		
	Value5	Status byte 0000 … 1111	Failure Code Button Lock Status Measurement Status Status Request	0xxx No failure 1xxx failure x0xx Unlocked x1xx Locked xx0x Inactive xx1x Active xxx0 No change xxx1 Status requested
	Value6	Failure Code 0…255 0...16: Reserved 17: Measurement error 18: Battery empty 19: Reserved 20: Frost protection 21 ...32: Reserved 33: Blocked valve 34 ...35: Reserved 36: End point detection error	37 ...39: Reserved 40: No valve 41 ...48: Reserved 49: Not taught in 50 ... 52: Reserved 53: No response from controller 54: Teach-in error 55 ... 255: Reserved	

A5-20-06 Harvesting-powered Actuator with Local Setpoint Control DIRECTION-1: Data received from actuator			
Registers	**Description**		
Value1	Actual Position 0…100 %		
Value2	Local Offset (absolute) 0…40 °C (x10) Local Offset (relative) -5…5 °C (x10)		1)
Value3	Temperature (ambient) 0…40 °C (x10)		2)
Value4	Temperature (feed) 0…80 °C (x10)		
Value5	Reserved		
Value6	Flags (single-bit values occurring in EEP telegram)		
Flags (16 bits)			3)
8 bits [15:8]	Reserved		
bit7 (MSB)	Local Offset Mode	0:Relative; 1:Absolute	
bit6	Temperature Selection	0:Ambient; 1:Feed	
bit5	Harvesting Status	0:Not harvesting; 1:Harvesting active	
bit4	Charge Level	0:Low; 1:Sufficient	
bit3	Window Open	0:False; 1:True	
bit2	Radio Error	0:False; 1:True (>= 6 consecutive errors)	
bit1	Signal Strength	0:Strong; 1:Weak	
bit0 (LSB)	Actuator Obstructed	0:False; 1:True	
Note			
1) The meaning of Value2 is defined by Local Offset Mode (Value6.bit7). 2) Temperature Selection (Value6.bit6) defines if Value3 or 4 was updated by the last telegram, the second value stays unchanged. 3) Bits are numbered from LSB to MSB, e.g. Flags = 128 (0x80) => bit7 = 1 (Local Offset Mode = 1:Absolute)			

A5-3F-7F Universal		
EEP	**Registers**	**Description**
A5-3F-7F	Value1	DB3: DataByte[0]
	Value2	DB2: DataByte[1]
	Value3	DB1: DataByte[2]
	Value4	DB0: DataByte[3]

6.4 Supported VLD telegrams

D2-01-XX Actuators, Dimmers		
EEP	**Registers**	**Description**
CMD = 0x01	**Value1**	**CMD = 1 Actuator Set Output**
	Value 2	Output value: 0: Output value 0% or OFF 1...100: Output value 1% to 100% or ON 101...126: Not used 127: Output value not valid / not applicable
	Value3	Dim value: 0: Switch to new output value 1: Dim to new output value – dim timer 1 2: Dim to new output value – dim timer 2 3: Dim to new output value – dim timer 3 4: Stop dimming 5...7: not used
	Value4	I/O channel 0...29: Output channel (to load) 30: All output channels supported by the device 31: Input channel (from mains supply)
CMD = 0x04	**Value1**	**CMD = 4 Actuator Status Response**
	Value2	Output value: 0: Output value 0% or OFF 1...100: Output value 1% to 100% or ON 101...126: Not used 127: Output value not valid / not applicable
	Value3	I/O channel 0...29: Output channel (to load) 30: All output channels supported by the device 31: Input channel (from mains supply)
	Value4	0: Local control disabled / not supported 1: Local control enabled
	Value5	100 Power Failure Detection enabled 10 Power Failure Detected 1 Over current switch off: executed
	Value6	Error level 0: Error level 0: hardware OK 1: Error level 1: hardware warning 2: Error level 2: hardware failure 3: Error level not supported
CMD = 0x07	**Value1**	**CMD = 7 Actuator Measurement Response**
	Value2	Value – low 16 bytes
	Value3	Value – high 16 bytes
	Value4	I/O channel 0...29: Output channel (to load) 30: All output channels supported by the device 31: Input channel (from mains supply)
	Value5	Unit 0: Energy [Ws] 1: Energy [Wh] 2: Energy [KWh] 3: Power [W]

		4: Power [KW] 5… 7: Not used	
CMD = 0x0A	**Value1**	**CMD = 10 Actuator Pilot Wire Mode Response**	
	Value2	Pilot wire mode 0: Off 1: Comfort 2: Eco	 3: Anti-freeze 4: Comfort-1 5: Comfort-2
CMD = 0x0D	**Value1**	**CMD = 13 Actuator External Interface Settings Response**	
	Value2	I/O channel 0...29: Output channel (to load) 30: All output channels supported by the device 31: Input channel (from mains supply)	
	Value3	Auto OFF Timer	
	Value4	Delay OFF Timer	
	Value5	External Switch/Push Button	
	Value6	2-State Switch	

D2-03-XX			
EEP	**Registers**	**Description**	
D2-03-00	Value1	Actual button code (0…4) 0: Button released 1: Button A-I 2: Button A-0 3: Button B-I 4: Button B-0	
	Value2	Previous button code	
	Value3	Before previous button code	
	Value4	Second action valid (0/1)	
	Value5	Energy bow (0: released; 1: pressed < 500 ms; 2: pressed > 500 ms)	
	Value6	Number of incoming telegrams from the last Modbus read of V1 (0…3)	
D2-03-0A	Value1	Button Action 1: simple press 2: double press	 3: long press 4: long press released
	Value2	Battery Autonomy 0 … 100%	
D2-03-10	Value1	Handle Position (0:Closed; 1:Open; 2:Up)	

D2-05-XX Blinds Control for Position and Angle		
EEP	**Registers**	**Description**
D2-05-00		
CMD = 0x04	**Value1**	**CMD index = 4 Reply Position and Angle**
	Value2	Channel address Channel 1
	Value3	Current vertical position 0...100: 0...100 % 127: Position unknown, will be known after the next goto cmd
	Value4	Current rotation angle 0...100: 0...100 % 127: Angle unknown, will be known after the next goto cmd
	Value5	Current locking mode 0: Normal (no lock) 1: Blockage mode 2: Alarm mode

		3 ... 7:Reserved
	Value6	0
Note		
1) The same mapping is valid for D2-05-00, D2-05-01, D2-05-02 and D2-05-03. 2) D2-05-03 partial support, only CMD1 to 4.		

D2-07-XX Door Locks			
EEP	**Registers**	**Description**	
D2-07-00	Value1	Bolt State (0:non-blocking; 1:blocking)	
	Value2	Catch State (0:non-blocking; 1:blocking)	
D2-07-01	Value1	Lock Number	
	Value2	3 bits [15:13]	Lock State
		1 bit [12]	DND State
		4 bits [11:8]	Event Type
		4 bits [7:4]	Key Type
		4 bits [3:0]	Type of actuation
	Value3	1 bit [15]	Alarm State
		7 bits [14:8]	Reason for rejection
		8 bits [7:0]	Actuation Identifier (AID B6)
	Value4	Actuation Identifier (AID B5B4)	
	Value5	Actuation Identifier (AID B3B2)	
	Value6	Actuation Identifier (AID B1B0)	

D2-11-XX Bidirectional Room Operating Panel MSG ID 2: Data from panel				
EEP	**Registers**	**Description**		
D2-11-01 ... D2-11-08	Value1	Temperature 0…40 °C (x10)		
	Value2	Setpoint offset 0…255		
	Value3	Humidity		
	Value4	Fan speed		
	Value5	Occupancy		
	Value6	1 bit [14]	Setpoint type	1
		2 bits [13:12]	Telegram type	2
		4 bits [11:8]	Valid temperature correction (scale of Setpoint offset)	3
		8 bits [7:0]	Setpoint base 15…30 °C	21 (0x15)
				0x6315
Note				
1) The presence of Humidity, Fan speed and Occupancy values depends on the individual EEP. 2) MSG ID 0 is ignored 3) Interpretation of Value2 depends on the other values, see EEP specification.				

D2-14-40 Multisensor: Temperature, Humidity, XYZ Acceleration, Illumination D2-14-41 Multisensor: Temperature, Humidity, XYZ Acceleration, Illumination, Window Contact	
Registers	**Description**
Value1	Temperature -40…60 °C (x10)
Value2	Humidity 0…100 % (x10)
Value3	Illumination 0…65535 lx
Value4	Contact (0: Open, 1: Closed)
Value5	Accelerometer data (HI)
Value6	Accelerometer data (LO)

Accelerometer data (32 bits)	
2 bits [31:30]	Telegram type (0: Periodic, 1: Threshold 1 exceeded, 2: Threshold 2 exceeded
10 bits [29:20]	Acceleration X 0…1000
10 bits [19:10]	Acceleration Y 0…1000
10 bits [9:0]	Acceleration Z 0…1000
Note	
1) Value4 is valid for D2-14-41 only. 2) Value5 and 6 contains compressed accelerometer data as it is transferred in the telegram. Acceleration conversion (0…1000 -> –2500…2500 mG): g = raw * 5 – 2500 [mG] 3) Encryption is not supported	

D2-14-XX Multisensor		
EEP	**Registers**	**Description**
D2-14-00	V1…V2	
D2-14-24	Value1	Illumination 17 bit split: value = (65536*HI + LO) lx Illumination (LO) 0…65535 lx
	Value2	Illumination (HI) 0…1
	Value3	Energy Storage
D2-14-25	Value1	Illumination 17 bit split: value = (65536*HI + LO) lx Illumination (LO) 0…65535 lx
	Value2	Illumination (HI) 0…1
	Value3	Color Temperature 0…30000 K
D2-14-30	V1…V12	Full values in **Rx data 2**
D2-14-31	V1…V14	Full values in **Rx data 2**
D2-14-50	V1…V2	
D2-14-51	V1…V2	
D2-14-52	Value1	Temperature 0…50 °C (x10)
	Value2	Illumination 17 bit split: value = (65536*HI + LO) lx Illumination (LO) 0…65535 lx
	Value3	Illumination (HI) 0…1
	Value4	Presence (0:Present, 1:NotPresent, 2:NotDetectable, 3:Error)
	Value5	Sound Pressure 0…204.6 dBSPL
D2-14-53	V1…V2	
D2-14-54	V1…V4	
D2-14-55	V1…V3	
D2-14-56	Value1	Illumination 17 bit split: value = (65536*HI + LO) lx Illumination (LO) 0…65535 lx
	Value2	Illumination (HI) 0…1
	Value3	Color Temperature 0…30000 K
	Value4	PPFD 20 bit split: value = (65536*HI + LO) umol/m2/s PPFD (LO) 0…65535 umol/m2/s
	Value5	PPFD (HI) 0…15
D2-14-57	V1…V15	Status and Occupancy: 1-bit channels merged into bitfields (25 -> 15 values): V1: Status (bitfield 4x1); V2: VOC; V3: Occupancy (bitfield 8x1); V4 … Full values in **Rx data 2**
D2-14-58	V1…V11	Full values in **Rx data 2**
D2-14-59	Value1	Humidity 0…100 % (x10)
	Value2	Temperature 0…80 °C (x10)
	Value3	PM10 0…510 ug/m3
	Value4	PM2.5 0…510 ug/m3
	Value5	PM1 0…510 ug/m3
	Value6	HCHO 0…2000 ppb

	Value7	TVOC 0…65000 ppb	Full values in **Rx data 2**
	Value8	CO2 0…10000 ppm	
D2-14-5A	V1…V4		
D2-14-5B	V1…V10	Full values in **Rx data 2**	
D2-14-5C	V1…V9	Full values in **Rx data 2**	
D2-14-5D	V1…V4		
D2-14-5E	Value1	PPFD 20 bit split: value = (65536*HI + LO) umol/m2/s PPFD (LO) 0…65535 umol/m2/s	
	Value2	PPFD (HI) 0…15	
	Value3	Barometer 500…1150 hPa	
	Value4	Air Temperature -40…60 °C (x10)	
	Value5	Leaf Temperature -40…60 °C (x10)	
	Value6	CO2 0…2500 ppm	
	Value7	Humidity 0…100 %	Full values in **Rx data 2**
	Value8	VPD 0…100 hPa	
D2-14-5F	V1…V4		

D2-32-XX Current sensors		
EEP	**Registers**	**Description**
D2-32-00	Value1	Channel 1 0…4095 A (x10)
	Value2	0
	Value3	0
	Value4	0
	Value5	Divisor (0:x/1; 1:x/10)
	Value6	Power Fail (0:False; 1:True)
D2-32-01	Value1	Channel 1 0…4095 A (x10)
	Value2	Channel 2 0…4095 A (x10)
	Value3	0
	Value4	0
	Value5	Divisor (0:x/1; 1:x/10)
	Value6	Power Fail (0:False; 1:True)
D2-32-02	Value1	Channel 1 0…4095 A (x10)
	Value2	Channel 2 0…4095 A (x10)
	Value3	Channel 3 0…4095 A (x10)
	Value4	0
	Value5	Divisor (0:x/1; 1:x/10)
	Value6	Power Fail (0:False; 1:True)
Note		
Value1, 2, 3 are already converted by the gateway using the Divisor.		

D2-FF-FF Universal		
EEP	**Registers**	**Description**
D2-FF-FF	Value1	(DataBytes[0] << 8) + DataBytes[1]
	Value2	(DataBytes[2] << 8) + DataBytes[3]
	Value3	(DataBytes[4] << 8) + DataBytes[5]
	Value4	(DataBytes[6] << 8) + DataBytes[7]
	Value5	(DataBytes[8] << 8) + DataBytes[9]
	Value6	(DataBytes[10] << 8) + DataBytes[11]

6.5 Supported MSC telegrams

Pressac three-channel temperature sensor		
EEP	**Registers**	**Description**
D1-03-C1	Value1	Temperature 1 (the most updated) -20… 100 °C (x10)
	Value2	Temperature 2 (the most updated) -20… 100 °C (x10)
	Value3	Temperature 3 (the most updated) -20… 100 °C (x10)
	Value4	1 range -20 … 100 °C
	Value5	Indoor temperature -20… 100 °C (x10)
	Value6	Repeating the sending 30, 60, 120 a 300s Solar cell (+1) battery (+0) e.g. 31 repeating the sending after 30s, solar power supply
D1-03-C2	Value1	Temperature 1 (the most updated) 0… 85 °C (x10)
	Value2	Temperature 2 (the most updated) 0… 85 °C (x10)
	Value3	Temperature 3 (the most updated) 0… 85 °C (x10)
	Value4	2 range 0 … 85 °C
	Value5	Indoor temperature 0… 85 °C (x10)
	Value6	Repeating the sending 30, 60, 120 a 300s Solar cell (+1) battery (+0) e.g. 31 repeating the sending after 30s, solar power supply
Note		
New sensors use EEP D2-0A-xx		

D1-FF-FF Universal		
EEP	**Registers**	**Description**
D1-FF-FF	Value1	(DataBytes[0] << 8) + DataBytes[1]
	Value2	(DataBytes[2] << 8) + DataBytes[3]
	Value3	(DataBytes[4] << 8) + DataBytes[5]
	Value4	(DataBytes[6] << 8) + DataBytes[7]
	Value5	(DataBytes[8] << 8) + DataBytes[9]
	Value6	(DataBytes[10] << 8) + DataBytes[11]

7 SUPPORTED EEPS FOR TRANSMITTING DATA

Following tables list supported device types (EEPs) for transmitting data. The support includes encoding of data points written to registers *Value1…Value*7 in *Tx data* into raw data bytes. The gateway can also handle the bidirectional communication of heating valves (A5-20-01, A5-20-06) – automatic response (use Send option = 3:Response on received always).

For unsupported EEPs, raw data are expected in *Value* registers. The format is described in universal profiles F6-3F-7F, D5-3F-7F, A5-3F-7F, D2-FF-FF and D1-FF-FF. Universal profiles can also be set for any device manually.

7.1 Supported RPS telegrams

F6-02-xx		
EEP	**Registers**	**Description**
F6-02-02	Value1	Rocker 1st action 0: Button AI: "Switch light on" or "Dim light up" or "Move blind open" 1: Button A0: "switch light off" or "Dim light down" or "Move blind closed" 2: Button BI: “Switch light on” or "Dim light up” or "Move blind open” 3: Button B0: “Switch light off” or “Dim light down” or "Move blind closed”
	Value2	2nd action
	Value3	Energy Bow: 0 – released; 1 – pressed
	Value7	It is copied directly to STATUS byte

F6-3F-7F Universal		
EEP	**Registers**	**Description**
F6-3F-7F	Value1	DB0: DataBytes[0]
	Value2	Status byte

7.2 Supported 1BS telegrams

D5-00-xx Contacts		
EEP	**Registers**	**Description**
D5-00-01	Value1	0: OPEN (without battery door/window contact) 1: CLOSE
	Learn	0: Data telegram 1: Learn mode

D5-3F-7F Universal		
EEP	**Registers**	**Description**
D5-3F-7F	Value1	DB0: DataBytes[0]

7.3 Supported 4BS telegrams

A5-02-xx		
EEP	**Registers**	**Description**
A5-02-01	Value1	X 10 Temperature -40…0 °C
A5-02-02	Value1	X 10 Temperature -30…10 °C
A5-02-03	Value1	X 10 Temperature -20…20 °C
A5-02-04	Value1	X 10 Temperature -10…30 °C
A5-02-05	Value1	X 10 Temperature 0…40 °C
A5-02-06	Value1	X 10 Temperature 10…50 °C
A5-02-07	Value1	X 10 Temperature 20…60 °C
A5-02-08	Value1	X 10 Temperature 30…70 °C
A5-02-09	Value1	X 10 Temperature 40…80 °C
A5-02-0A	Value1	X 10 Temperature 50…90 °C
A5-02-0B	Value1	X 10 Temperature 60…100 °C
A5-02-10	Value1	X 10 Temperature -60…20 °C
A5-02-11	Value1	X 10 Temperature -50…30 °C

A5-02-12	Value1	X 10 Temperature -40…40 °C
A5-02-13	Value1	X 10 Temperature -30…50 °C
A5-02-14	Value1	X 10 Temperature -20…60 °C
A5-02-15	Value1	X 10 Temperature -10…70 °C
A5-02-16	Value1	X 10 Temperature 0…80 °C
A5-02-17	Value1	X 10 Temperature 10…90 °C
A5-02-18	Value1	X 10 Temperature 20…100 °C
A5-02-19	Value1	X 10 Temperature 30…110 °C
A5-02-1A	Value1	X 10 Temperature 40…120 °C
A5-02-1B	Value1	X 10 Temperature 50…130 °C

A5-04-xx		
EEP	**Registers**	**Description**
A5-04-01	Value1	x 10 Temperature 0…40 °C (0…400)
	Value2	x 10 Humidity 0…100% (0…1000)
	Value3	Temperature sensor available (1) not available (0)
	Value 4-7	Not used
A5-04-02	Value1	x 10 Temperature -20…60 °C (-200…600)
	Value2	x 10 Humidity 0…100% (0…1000)
	Value 3-7	Not used
A5-04-03	Value1	x 10 Temperature -20…60 °C (-200…600)
	Value2	x 10 Humidity 0…100% (0…1000)
	Value3	Type of telegram 0: Heartbeat 1: Even Triggered
	Value 4-7	Not used

A5-05-xx		
EEP	**Registers**	**Description**
A5-05-01	Value1	Air pressure 500-1150hPa
	Value2	Type of telegram 0: Heartbeat 1: Even Triggered
	Value 3-7	Not used

A5-20-xx		
EEP	**Registers**	**Description**
A5-20-01	Value1	Actuator position 0…100 or temperature 0…400 (0…40°C)
	Value2	Actual room temperature from GWY to actuator
	Value3	Meaning of value 1 0 – Actuator position 1 – Temperature
	Value4	1 – run unit sequence 2 – lift set 3 – run unit sequence+left set
	Value5	1 – valve open maintenance 2 – valve closed 10 – set point inverse 11 – valve open maintenance + set point inverse 12 – valve closed + set point inverse
	Value6	0 – nothing 1 – summer mode
	Value7	0 – RCU 1 – Service on
	Teach-in	0: Data telegram 1: Learning mode

A5-20-04	Value1	Actuator position 0…100% (Valve Position)			
	Value2	Temperature Set Point 10…30°C			
	Value3	Wake-up Cycle 0: 10 sec 1: 60 sec 2: 90 sec 3: 120 sec 4: 150 sec 5: 180 sec 6: 210 sec 7: 240 sec 8: 270 sec 9: 300 sec (5min) 10: 330 sec 11: 360 sec 12: 390 sec 13: 420 sec 14: 450 sec 15: 480 sec 16: 510 sec 17: 540 sec	18: 570 sec 19: 600 sec (10min) 20: 630 sec 21: 660 sec 22: 690 sec 23: 720 sec 24: 750 sec 25: 780 sec 26: 810 sec 27: 840 sec 28: 870 sec 29: 900 sec (15min) 30: 930 sec 31: 960 sec 32: 990 sec 33: 1020 sec 34: 1050 sec	35: 1080 sec 36: 1110 sec 37: 1140 sec 38: 1170 sec 39: 1200 sec (20min) 40: 1230 sec 41: 1260 sec 42: 1290 sec 43: 1320 sec 44: 1350 sec 45: 1380 sec 46: 1410 sec 47: 1440 sec 48: 1470 sec 49: 1500 sec (25min)	50: 3 hrs 51: 6 hrs 52: 9 hrs 53: 12 hrs 54: 15 hrs 55: 18 hrs 56: 21 hrs 57: 24 hrs 58: 27 hrs 59: 30 hrs 60: 33 hrs 61: 36 hrs 62: 39 hrs 63: 42 hrs (max)
	Value4	Measurement Control 0: Disable 1:Enable Control the temperature measurement (feed temperature + room temperature)			
	Value5	Button Lock Control 0: Unlocked 1: Locked			
	Value6	Display Orientation	0: 0° 1: 90° 2: 180° 3: 270°		
	Value7	Reserved			
	Teach-in	0: Data telegram 1: Learning mode			

A5-20-06 Harvesting-powered Actuator with Local Setpoint Control DIRECTION-2: Data and commands sent to actuator				
Registers	**Description**			
Value1	Valve Position 0…100 %			1)
Value2	Temperature Setpoint 0…40 °C (x10)			
Value3	Temperature from RCU 0…40 °C (x10)			
Value4	Reserved			
Value5	Reserved			
Value6	Radio Interval	0:Auto; 1:2 min; 2:5 min;	3:10 min; 4:20 min; 5:30 min;	6:60 min; 7:120 min
Value7	Flags (single-bit values occurring in EEP telegram)			
Flags (16 bits)				2)
8 bits [15:8]	Reserved			
3 bits [7:5]	Reserved			
bit4 (MSB)	Reference Run	0:False; 1:True		
bit3	Summer Mode	0:False; 1:True		
bit2	Setpoint Selection	0:Valve position; 1:Temperature		

bit1	Temperature Selection	0:Ambient; 1:Feed
bit0 (LSB)	Standby Mode	0:False; 1:True
Note		
1) Setpoint Selection (Value7.bit2) defines if Value1 or 2 is used, the second value has no effect. 2) Bits are numbered from LSB to MSB, e.g. Flags = 4 (0x04) => bit2 = 1 (Setpoint Selection = 1:Temperature)		

A5-38-08		
EEP	**Registers**	**Description**
COM ID 1	**Value1**	**Command ID = 1 Switching**
	Value2	SW Switching Command ON/OFF Enum: 0: Off 1: On
	Value3	Time (in 1/10 second) 0= no time specifed 1…65535: 0,1 … 6553,5s
	Value4	Duration (Execute switching command immediately and switch back after duration) 1 = Delay (Execute switching command after delay) 0: Duration 1: Delay
	Value5	0: Unlock 1: Lock Lock for duration time if time >0, unlimited time of no time specified. Locking may be cleared with „unlock“. During lock phase no other commands will be accepted or executed
	Teach-in	0: Data telegram 1: Learning mode
COM ID 2	**Value1**	**Command ID = 2 Dimming**
	Value2	SW Switching Command ON/OFF Enum: 0: Off 1: On
	Value3	Dimming value (absolute [0...255] or relative [0...100]) 0...255 0...100 %
	Value4	Dimming Range EDIM R Dimming Range 0: Absolute value 1: Relative value
	Value5	Ramping time RMP Ramping time in seconds, 0 = no ramping, 1... 255 = seconds to 100% 0...255 0...255 s
	Value6	Store final value STR Store final value 0: No 1: Yes
	Teach-in	0: Data telegram 1: Learning mode

A5-3F-7F Universal		
EEP	**Registers**	**Description**
A5-3F-7F	Value1	DB3: DataByte[0]
	Value2	DB2: DataByte[1]
	Value3	DB1: DataByte[2]
	Value4	DB0: DataByte[3]

7.3.1 BIDIRECTIONAL TEACH-IN (4BS TEACH-IN – VARIATION 3)

The bidirectional teach-in has been simplified since firmware V1.18, use 4.1.4->"LRN enable".

The pairing procedure for valve actuators (e.g. MD15-FTL-HE) is in the form query – answer. The gateway makes this process automatically. It is necessary to follow this procedure in registers for transmitting channels (*Tx data*):

1. Fill in actuator ID to *Destination ID* registers.
2. Fill in RORG, TYPE, FUNC.
3. Set register *Learn button* to 1.
4. For valve actuators, set *Send option = 3 – Response on received always*, otherwise *Send option = 2*.
5. Press button on actuator (or follow steps for teach-in activation), the teach-in process will start.
6. Set register *Learn button* to 0 when pairing is done.

You can get the actuator ID and EEP from the previous teach-in query:

1. Press button on actuator
2. The last teach-in query is shown in the *New device* registers (see Ch. 4.1.4, registers 1012 up)
3. Copy the New device ID end EEP to the desired channel

Notes:

1) To use the BaseID, fill in the Sender ID registers prior to the teach-in procedure.

7.4 Supported VLD telegrams

D2-01-XX		
EEP	**Registers**	**Description**
CMD – 0x01	**Value1**	**CMD = 1 Actuator Set Output**
	Value2	Output value: 0 – 100% (0=OFF; 100=ON)
	Value3	I/O Channel 0 – 29 30 = All channels 31 = Input channel (from mains supply)
	Value4	Diming 0x00: Switch to new output value 0x01: Dim to new output value – dim timer 1 0x02: Dim to new output value – dim timer 2 0x03: Dim to new output value – dim timer 3 0x04: Stop dimming
	Value5-7	Not Used
	Teach-in	0
CMD – 0x02	**Value1**	**CMD = 2 Actuator Set Local**
	Value 2	I/O channel 0...29: Output channel (to load) 30: All output channels supported by the device 31: Input channel (from mains supply)
	Value 3	Dim timer 1 - fast 0: Not used 1…15: Dim timer 1 [0,5 … 7,5s / steps 0,5s]
	Value4	Dim timer 2 - medium 0: Not used 1…15: Dim timer 1 [0,5 … 7,5s / steps 0,5s]
	Value5	Dim timer 3 - slow 0: Not used 1…15: Dim timer 1 [0,5 … 7,5s / steps 0,5s]

	Value6	0: Disable taught-in devices (with different EEP) 1: Enable taught-in devices (with different EEP) 0: Over current shut down: static off 10: Over current shut down: automatic restart 0: Reset over current shut down: not active 100: Reset over current shut down: trigger signal 0: Disable local control 1000: Enable local control Sample: 1011 Enable local control; Reset over current shut down: not active; Over current shut down: automatic restart; Enable taught-in devices (with different EEP)
	Value7	Default state DS 0: Default state: 0% or OFF 1: Default state: 100% or ON 2: Default state: remember previous state 3: Not used 0: Disable Power Failure Detection 10: Enable Power Failure Detection 0: User interface indication: day operation 100: User interface indication: night operation Sample: 103 User interface indication: night operation; Disable Power Failure Detection; Default state: Not used
	Teach-in	0
CMD – 0x03	**Value1**	**CMD = 3 Actuator Status Query**
	Value 2	I/O channel 0...29: Output channel (to load) 30: All output channels supported by the device 31: Input channel (from mains supply)
	Value3-7	Not Used
	Teach-in	0
CMD – 0x05	**Value1**	**CMD = 5 Actuator Set Measurement**
	Value2	I/O channel 0...29: Output channel (to load) 30: All output channels supported by the device 31: Input channel (from mains supply)
	Value3	Unit UN 0: Energy [Ws] 1: Energy [Wh] 2: Energy [KWh] 3: Power [W] 4: Power [KW]
	Value4	Measurement delta to be reported 0...4095: 0...4095
	Value5	Maximum time between two subsequent actuator messages MAT Measurement Response messages [10s] 1...255: 10...2550s
	Value6	Minimum time between two subsequent actuator messages MIT Measurement Response messages[s] 1...255: 1...255s
	Value7	0: Report measurement: query only 1: Report measurement: query /auto reporting 0: Reset measurement: not active 10: Reset measurement: trigger signal

		0: Energy measurement 100: Power measurement	
	Teach-in	0	
CMD – 0x06	**Value1**	**CMD = 6 Actuator Measurement Query**	
	Value2	I/O channel 0...29: Output channel (to load) 30: All output channels supported by the device 31: Input channel (from mains supply)	
	Value3	0: Query energy 1: Query power	
	Value4-7	Not Used	
	Teach-in	0	
CMD – 0x08	**Value1**	**CMD = 8 Actuator Set Pilot Wire Mode**	
	Value2	Pilotwire mode 0: Off 1: Comfort 2: Eco	 3: Anti-freeze 4: Comfort-1 5: Comfort-2
	Value3-7	Not Used	
	Teach-in	0	
CMD – 0x09	**Value1**	**CMD = 9 Actuator Pilot Wire Mode Query**	
	Value2-7	Not Used	
	Teach-in	0	
CMD – 0x0A	**Value1**	**CMD = 11 Actuator Set External Interface Settings**	
	Value2	I/O channel 0...29: Output channel (to load) 30: All output channels supported by the device 31: Input channel (from mains supply)	
	Value3	Auto OFF Timer 0: Timer deactivated 1...65534: 0.1...6553.4 s 65535: Does not modify saved value	
	Value4	Delay OFF Timer 0: Timer deactivated 1...65534: 0.1...6553.4 s 65535: Does not modify saved value	
	Value5	External Switch/Push Button (External interface mode) 0: Not applicable 1: External Switch 2: External Push Button 3: Auto detect	
	Value6	2 – state switch - Switching state 0: Change of key state sets ON or OFF 1: Specific ON/OFF positions. ON when contacts are closed. OFF when contacts are open.	
	Value7	Not Used	
	Teach-in	0	
CMD – 0x0C	**Value1**	**CMD = 12 Actuator External Interface Settings Query**	
	Value2	I/O channel 0...29: Output channel (to load) 30: All output channels supported by the device 31: Input channel (from mains supply)	
CMD – 0x0F	**Value1**	**CMD = 15 Actuator Set Dimming Limits**	
	Value2	ECID – Extended Command ID = 0 Setting min, max	

		ID=1 Actuator dimming limits query
	Value3	Output channel 0...29: Output channel (to load) 30: All output channels supported by the device 31: Reserved
	Value4	(only ECID = 0) MAXV Set dimming maximum value (Maximum value is set to 100%)
	Value5	(only ECID = 0) MINV Set dimming minimum value (Minimum value is set 0%)

D2-05-XX Blinds Control for Position and Angle		
EEP	**Registers**	**Description**
D2-05-00		
CMD – 0x01	**Value1**	**CMD = 1 Goto command**
	Value2	Channel address Channel (1)
	Value3	Vertical position 0…100: 0…100 % 127: Do not change
	Value4	Rotation angle Enum: 0…100: 0…100 % 127: Do not change
	Value5	How to adjust the internal positioning tracker before going to the new position 0: Go directly to POS/ANG 1: Go up (0%), then to POS/ANG 2: Go down (100%), then to POS/ANG 3 … 7:Reserved
	Value6	LOCK Set/reset locking modes 0: Do not change 1: Set blockage mode 2: Set alarm mode 3 … 6:Reserved 7: Deblockage
	Value7	Not used
	Teach-in	0
CMD – 0x02	**Value1**	**CMD = 2 Stop**
	Value 2	Channel address Channel (1)
	Value3…7	Not used
	Teach-in	0
CMD – 0x03	**Value1**	**CMD = 3 Query Position and Angle**
	Value 2	Channel address Channel (1)
	Value3…7	Not used
	Teach-in	0
CMD – 0x05	**Value1**	**CMD = 5 Set parameters**
	Value 2	Channel address Channel (1)
	Value3	Measured duration of a vertical run 0 … 499: Reserved 500...30 000: 5000...300000 ms (500 = 5s… 30 000 = 300s) 32767 (0x7FFF): -> No change
	Value4	Measured duration of rotation 1...254: 10...2540 ms (1 = 0,01s … 254 = 2,54s) 0: No rotation 255: -> No change
	Value5	Set alarm action Besides locking all other commands entering the alarm mode results in 0: No action

		1: Immediate stop 2: Go up (0%) 3: Go down (100%) 4 ... 6:Reserved 7: -> No change
	Value6-7	Not used
	Teach-in	0
Note		
1) The same mapping is valid for D2-05-00, D2-05-01, D2-05-02 and D2-05-03. 2) D2-05-03 partial support, only CMD1 to 4.		

D2-11-XX Bidirectional Room Operating Panel MSG ID 1: Data to panel				
EEP	**Registers**	**Description**		
D2-11-01 … D2-11-08	Value1	Setpoint type		
	Value2	Setpoint offset (Temperature correction) 0…255		
	Value3	Setpoint base 15…30 °C		
	Value4	Valid temperature correction (scale of Setpoint offset)		
	Value5	Fan speed		
	Value6	Occupancy		
	Value7 Symbols	1 bit [2]	Heating symbol on/off	1
		1 bit [1]	Cooling symbol on/off	0
		1 bit [0]	Window open symbol on/off	1
				0x0005
Note				
1) Interpretation of Value2 depends on the other values, see EEP specification. 2) For parameters that are not to be changed, the corresponding values last received from the panel must be copied here.				

D2-FF-FF Universal		
EEP	**Registers**	**Description**
D2-FF-FF	Value1	Length of data 1…12 (1…9 for addressed telegrams)
	Value2	(DataBytes[0] << 8) + DataBytes[1]
	Value3	(DataBytes[2] << 8) + DataBytes[3]
	Value4	(DataBytes[4] << 8) + DataBytes[5]
	Value5	(DataBytes[6] << 8) + DataBytes[7]
	Value6	(DataBytes[8] << 8) + DataBytes[9]
	Value7	(DataBytes[10] << 8) + DataBytes[11]

7.4.1 BIDIRECTIONAL TEACH-IN (UTE TEACH-IN)

The bidirectional teach-in has been simplified since firmware V1.18, use 4.1.4->"LRN enable".

The pairing procedure for actuators using VLD is in the form query – answer. UTE telegram type is used. The gateway makes this process automatically. It is necessary to follow this procedure in registers for transmitting channels (*Tx data*):

1. Set *Send option = 4 – UTE response once*.
2. Press button on actuator (or follow steps for teach-in activation), the teach-in process will start.
3. The ID and EEP of the actuator appears in the Destination ID and EEP registers (see Ch. 4.1.7)

Notes:

1) To use the BaseID, fill in the Sender ID registers prior to the teach-in procedure.
2) The changes happening in the point 3. are not persistent (are lost after power off). Write the Tx channel by Modbus function 16 to make it persistent.

UTE MESSAGE (UNIVERSAL TEACH-IN)

The UTE query or response can also be written to registers and sent.

D4-XX-XX UTE		
EEP	**Registers**	**Description**
	Value1	DB6.7 0b0 Unidirectional communication (EEP operation) 0b1 Bidirectional communication (EEP operation) DB6.6 0b0 EEP Teach-In-Response message expected 0b1 No EEP Teach-In-Response message expected DB6.5 ... DB6.4 0b00 Teach-in request 0b01 Teach-in deletion request 0b10 Teach-in or deletion of teach-in, not specified 0b11 Not used
	Value 2	DB_5 Number of individual channel to be taught in
	Value3	DB_4 MID (8LSB) Manufacturer-ID (8LSB)
	Value4	DB_3 MID (3MSB) Manufacturer-ID (3MSB)
	Value5	DB_2 TYPE
	Value6	DB_1 FUNC
	Value7	DB_0 RORG

7.4.2 Smart Ack teach-in

The Smart ACK (Smart Acknowledge) protocol enables bidirectional communication with energy self-sufficient devices. For example, Room Operating Panels D2-11-XX utilize the Smart ACK communication to receive data, which is used to show symbols on the display or override some parameters.

The Smart ACK protocol is described here. When a message is sent to a Smart ACK Sensor, a device called "Post Master" stores it in a "Mailbox" until the sensor is ready to receive telegrams. When the sensor wakes up, it checks the Mailbox. The Post Master sends the message buffered in the Mailbox or Mailbox Empty message if the Mailbox is empty. The sensor receives the response from Post Master and returns to sleep mode. The Post Master is selected (and the Mailbox is established in Post Master) during teach-in process.

The gateway does not support the teach-in with repeaters, there must be a direct connection between the gateway and the Smart ACK device, i.e. Post Master and Mailbox are located in the gateway.

The bidirectional teach-in has been simplified since firmware V1.18, use 4.1.4->"LRN enable".

To Smart Ack teach-in:

1. Set *Send option = 4 – UTE response once*.
2. Press teach-in button on the device (or follow steps for teach-in activation), the teach-in process will start.
3. The ID and EEP of the device appears in the Destination ID and EEP registers (see Ch. 4.1.7)

Notes:

1) If the Sender ID is changed, the mailbox is deleted and the teach-in must be repeated.
2) The changes happening in the point 3. are not persistent (are lost after power off). Write the Tx channel by Modbus function 16 to make it persistent.

7.5 Supported MSC telegrams

D1-FF-FF Universal		
EEP	**Registers**	**Description**
D1-FF-FF	Value1	Length of data 1…12 (1…9 for addressed telegrams)
	Value2	(DataBytes[0] << 8) + DataBytes[1]
	Value3	(DataBytes[2] << 8) + DataBytes[3]
	Value4	(DataBytes[4] << 8) + DataBytes[5]
	Value5	(DataBytes[6] << 8) + DataBytes[7]
	Value6	(DataBytes[8] << 8) + DataBytes[9]
	Value7	(DataBytes[10] << 8) + DataBytes[11]

REVISION HISTORY

Date	Version	Description
2nd March 2018	V1.3	Supported 4BS telegrams (chapter 7.1) Supported 4BS telegrams (chapter 8.3)
10th October 2018	V1.4	Repair connection RS 232, text corrections
25th October 2018	V1.5	Enlargement of supported MSC telegrams for PRESSAC 3 channel temperature
17th December 2018	V1.6	Repair of technical information
22nd February 2019	V1.7	The protocol D2-01-0C added
4th March 2019	V1.8	The protocol D2-01-0F (page….) added
10th May 2019	V1.9	EEP protocols and description of saving channel descriptions added
13th August 2019	V1.10	Transmitting protocols A5-04-(01,02,03) a A5-05-01 added
21st May 2020	V1.11	D2-03-0A added
30th January 2023	V1.12	Text corrections
9th June 2023	V1.13	Added description of D2-14-40,41
1st August 2023	V1.14	Added description of A5-20-06
14th September 2023	V1.15	Text corrections
18th January 2024	V1.16	General corrections, conversion to new graphical format
30th January 2024	V1.17	Adding package contents, firmware upgrade, installation instructions
1st March 2024	V1.18	Updated to firmware V1.15
11th December 2024	V1.19	Updated to firmware V1.17
30th May 2025	V1.20	Updated to firmware V1.18 (add register 1022 “LRN enable”)
13th October 2026	V1.21	Updated to firmware V1.19 (new EEPs D2-14-xx)